KAWASAKI

2011

ULTRA 300X(JT1500HBF)

BILGE SYSTEM

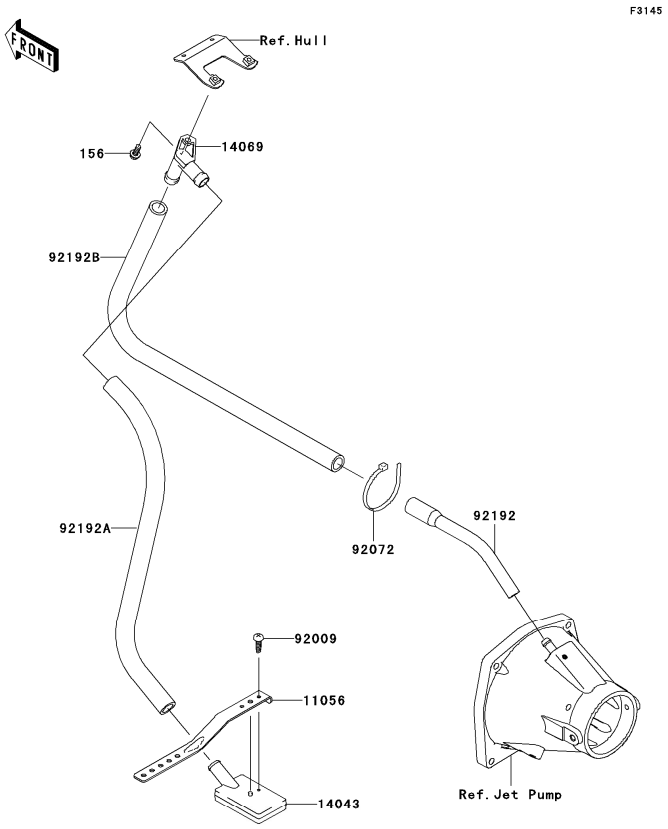

11056	11056-3721	BRACKET,LH&RH
14043	14043-3711	FILTER
14069	14069-3708	BREATHER
156	156R0616	BOLT-WP,6X16
92009	92009-3762	SCREW,TAPPING,4X14
92072	92072-0105	BAND,L=188.85
92192	92192-3753	TUBE,HULL-NOZZLE
92192A	92192-3755	TUBE,FILTER-BREATHER
92192B	92192-3826	TUBE,BREATHER-HULL

©2016 Kawasaki Motors Corp., U.S.A.

KAWASAKI

2011

ULTRA 300X(JT1500HBF)

CABLES

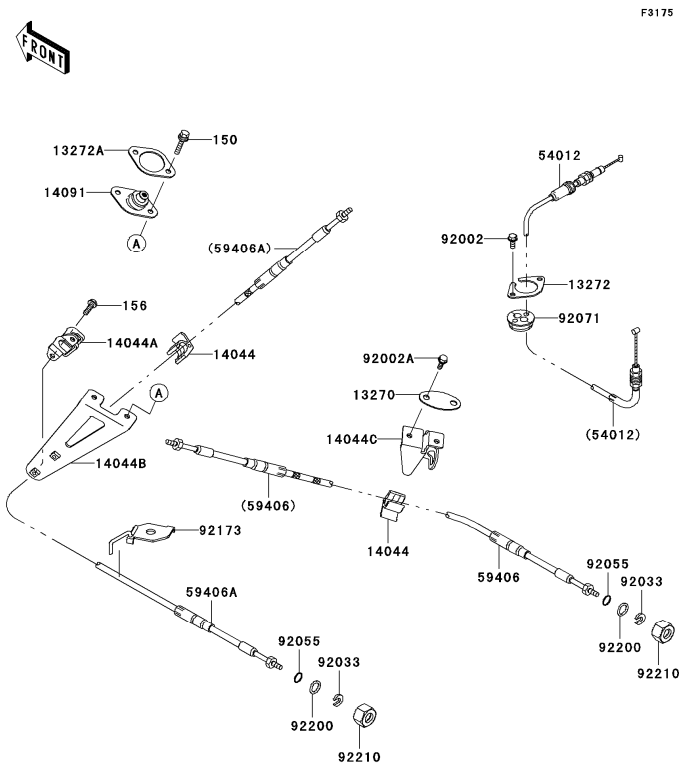

©2016 Kawasaki Motors Corp., U.S.A.

13270	13270-3860	PLATE
13272	13272-3729	PLATE
13272A	13272-3730	PLATE
14044	14044-3765	HOLDER-CABLE
14044A	14044-3766	HOLDER-CABLE,REVERSE
14044B	14044-3767	HOLDER-CABLE,REVERSE
14044C	14044-3769	HOLDER-CABLE,STEERING
14091	14091-3821	COVER
150	150R0625	BOLT-WS,6X25
156	156R0616	BOLT-WP,6X16
54012	54012-3777	CABLE-THROTTLE
59406	59406-3785	CABLE-STRG,STEERING
59406A	59406-3786	CABLE-STRG,REVERSE
92002	92002-3728	BOLT,6X16
92002A	92002-3755	BOLT,6X20
92033	92033-3735	RING-SNAP
92055	92055-3778	RING-O
92071	92071-3790	GROMMET,HARNESS
92173	92173-3704	CLAMP
92200	92200-3793	WASHER,14.5X20X1.5
92210	92210-3772	NUT,22MM

KAWASAKI

2011

ULTRA 300X(JT1500HBF)

CAMSHAFT(S)/TENSIONER

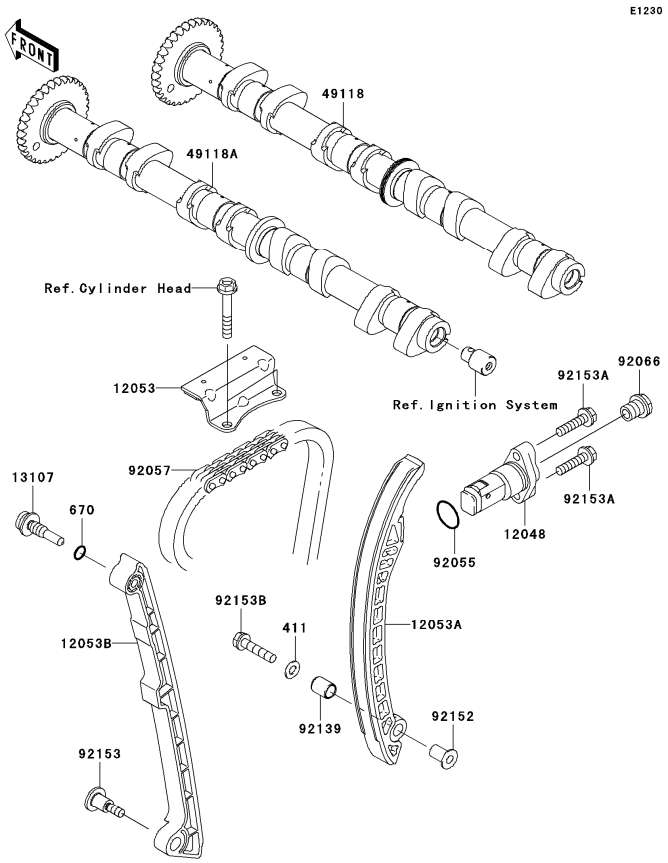

©2016 Kawasaki Motors Corp., U.S.A.

12048	12048-0081	TENSIONER-ASSY
12053	12053-1432	GUIDE-CHAIN,UPP
12053A	12053-3710	GUIDE-CHAIN,RR
12053B	12053-3711	GUIDE-CHAIN,FR
13107	13107-0157	SHAFT,CHAIN GUIDE
411	411S0600	WASHER-PLAIN,6MM
49118	49118-3717	CAMSHAFT-COMP,INTAKE
49118A	49118-3719	CAMSHAFT-COMP,EXHAUST
670	670D1509	O RING,9MM
92055	92055-086	RING-O,18.8X1.9
92057	92057-3715	CHAIN,98XRH2020-138L
92066	92066-3780	PLUG
92139	92139-0716	BUSHING,9X11X13.9
92152	92152-0981	COLLAR
92153	92153-1200	BOLT,SOCKET,6X24.5
92153A	92153-3705	BOLT,6X25
92153B	92153-3710	BOLT,6X28

KAWASAKI

2011

ULTRA 300X(JT1500HBF)

CONTROL

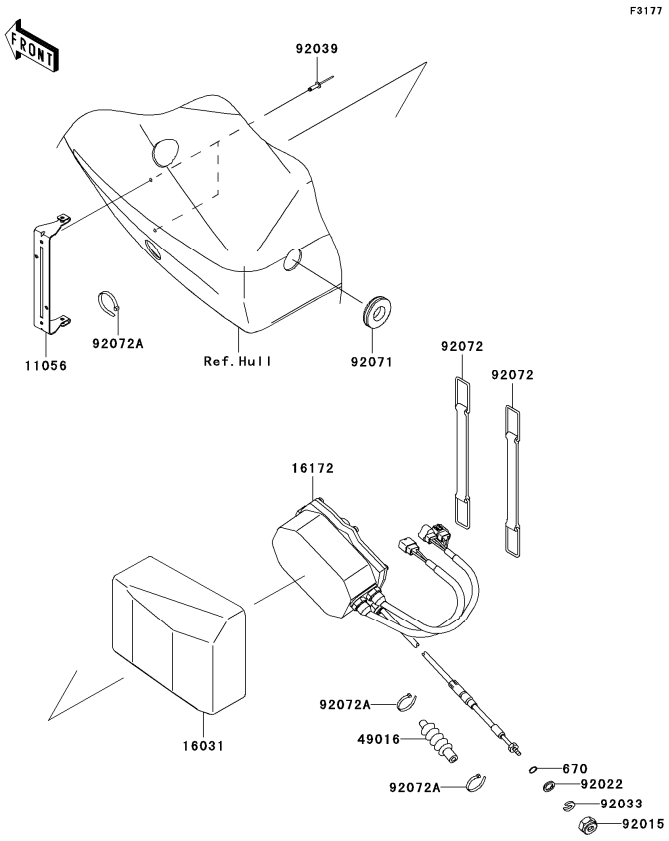

©2016 Kawasaki Motors Corp., U.S.A.

11056	11056-0711	BRACKET
16031	16031-3993	FLOAT
16172	16172-3707	ACTUATOR,JET PUMP
49016	49016-3702	COVER-SEAL,TILT CABLE
670	670B2011	O RING,11MM
92015	92015-526	NUT,20MM
92022	92022-535	WASHER
92033	92033-3737	RING-SNAP,7.7X17.5X3.0
92039	92039-3714	RIVET
92071	92071-3840	GROMMET
92072	92072-3841	BAND,BATTERY
92072A	92072-3882	BAND,L=100.08

KAWASAKI

2011

ULTRA 300X(JT1500HBF)

COOLING

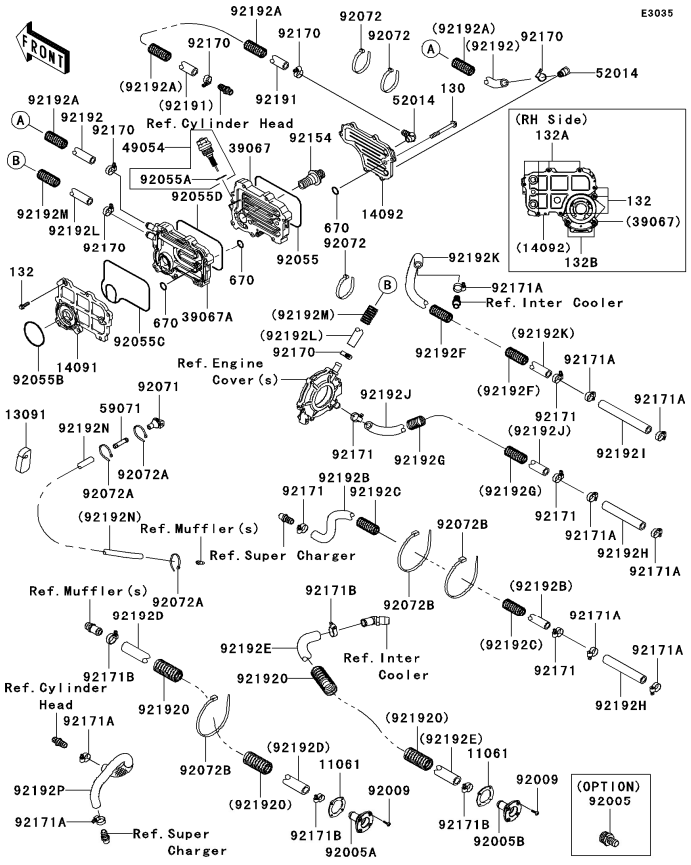

©2016 Kawasaki Motors Corp., U.S.A.

11061	11061-3769	GASKET
130	130BD0870	BOLT-FLANGED,8X70
13091	13091-3712	HOLDER
132	132BD0620	BOLT-FLANGED-SMALL,6X20
132A	132BD0640	BOLT-FLANGED-SMALL,6X40
132B	132BD0645	BOLT-FLANGED-SMALL,6X45
14091	14091-3755	COVER,INSIDE
14092	14092-0765	COVER,OUTSIDE
39067	39067-0708	COOLER-OIL,OUTSIDE
39067A	39067-3707	COOLER-OIL,INSIDE
49054	49054-3701	THERMOSTAT
52014	52014-3711	ELBOW
59071	59071-3764	JOINT
670	670D2014	O RING,14MM
92005	92005-3748	FITTING,FLUSH (OPTION)
92005A	92005-3770	FITTING,BLACK
92005B	92005-3771	FITTING,GRAY
92009	92009-3849	SCREW,TAPPING,4X16
92055	92055-0708	RING-O
92055A	92055-0727	RING-O
92055B	92055-3767	RING-O,58X3
92055C	92055-3770	RING-O
92055D	92055-3772	RING-O
92071	92071-3815	GROMMET
92072	92072-0106	BAND,L=200
92072A	92072-3882	BAND,L=100.08
92072B	92072-3883	BAND,L=372.24
92154	92154-3719	BOLT
92170	92170-3729	CLAMP
92171	92171-3701	CLAMP
92171A	92171-3714	CLAMP
92171B	92171-3720	CLAMP,26MM
92191	92191-3919	TUBE,WATER FILTER-HULL
92192	92192-0971	TUBE,OIL COOLER-ELBOW
92192A	92192-0986	TUBE,OIL COOLER-HEAD
92192B	92192-1037	TUBE,COMPRESSOR-HULL
92192C	92192-1038	TUBE,CORRUGATED,L=620
92192D	92192-1039	TUBE,16X23X950
92192E	92192-1040	TUBE,INTER COOLER-HULL
92192F	92192-3714	TUBE,CORRUGATED,19.5X23.8X380
92192G	92192-3783	TUBE,CORRUGATED,19.5X23.8X500
92192H	92192-3796	TUBE,12X19X120
92192I	92192-3797	TUBE,12X19X150
92192J	92192-3798	TUBE,12X19X55&620
92192K	92192-3800	TUBE,HULL-I/C
92192L	92192-3816	TUBE,GENE.COVER-O/C
92192M	92192-3817	TUBE,CORRUGATED,19.5X23.8X700
92192N	92192-3821	TUBE,7X12X1590/30
92192O	92192-3862	TUBE,CORRUGATED,L=870
92192P	92192-3866	TUBE,COMPRESSOR-HEAD

KAWASAKI

2011

ULTRA 300X(JT1500HBF)

CRANKCASE

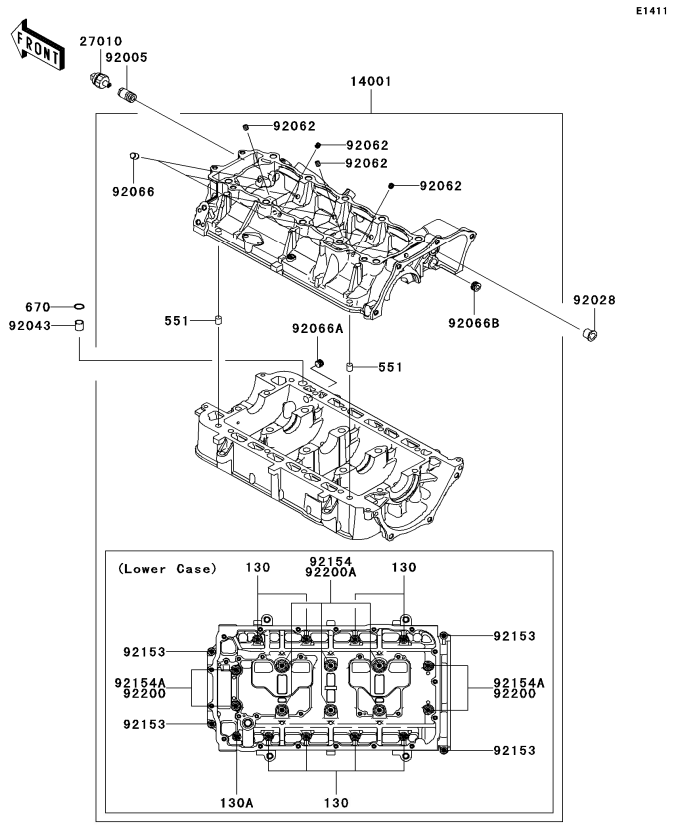

©2016 Kawasaki Motors Corp., U.S.A.

130	130CD0845	BOLT-FLANGED,8X45
130A	130CD0855	BOLT-FLANGED,8X55
14001	14001-0567	SET-CRANKCASE
27010	27010-3786	SWITCH,OIL PRESSURE
551	551R1012	PIN-DOWEL
670	670D2014	O RING,14MM
92005	92005-0714	FITTING
92028	92028-3718	BUSHING
92043	92043-1279	PIN,11.5X14X14
92062	92062-0004	NOZZLE
92066	92066-1012	PLUG,OIL LINE,7.2X8
92066A	92066-3778	PLUG
92066B	92066-3782	PLUG
92153	92153-3707	BOLT,6X30
92154	92154-0719	BOLT
92154A	92154-0720	BOLT
92200	92200-0743	WASHER
92200A	92200-0747	WASHER,11.5X20.5X1.6

KAWASAKI

2011

ULTRA 300X(JT1500HBF)

CRANKSHAFT

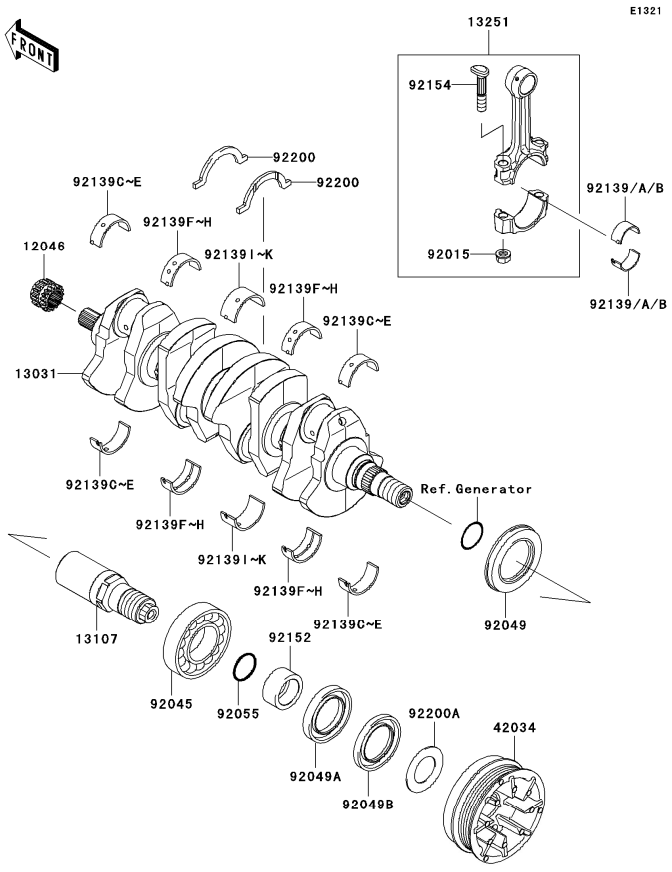

©2016 Kawasaki Motors Corp., U.S.A.

12046	12046-3711	SPROCKET,17T
13031	13031-3743	CRANKSHAFT-COMP
13107	13107-3810	SHAFT
13251	13251-3703-II	ROD-ASSY-CONNECTING,I
42034	42034-3723	COUPLING
92015	92015-1559	NUT,CONNECTING ROD
92045	92045-3739	BEARING-BALL,6208ZZ AS2S
92049	92049-3736	SEAL-OIL,SD347626LHS
92049A	92049-3737	SEAL-OIL,FPJ740628.5ZS
92049B	92049-3738	SEAL-OIL,S40626NS
92055	92055-091	RING-O,27.7X2.4
92139	92139-0722	BUSHING,CONNECTING ROD,GREEN
92139A	92139-0723	BUSHING,CONNECTING ROD,YELLOW
92139B	92139-0724	BUSHING,CONNECTING ROD,PINK
92139C	92139-0725	BUSHING,CRANKSHAFT,#1&#5,GREEN
92139D	92139-0726	BUSHING,CRANKSHAFT,#1&#5,YEL
92139E	92139-0727	BUSHING,CRANKSHAFT,#1&#5,PINK
92139F	92139-0728	BUSHING,CRANKSHAFT,#2&#4,GREEN
92139G	92139-0729	BUSHING,CRANKSHAFT,#2&#4,YEL
92139H	92139-0730	BUSHING,CRANKSHAFT,#2&#4,PINK
92139I	92139-0731	BUSHING,CRANKSHAFT,#3,GREEN
92139J	92139-0732	BUSHING,CRANKSHAFT,#3,YELLOW
92139K	92139-0733	BUSHING,CRANKSHAFT,#3,PINK
92152	92152-3759	COLLAR,30X40X18
92154	92154-3720	BOLT,CONNECTING ROD,9MM
92200	92200-3789	WASHER
92200A	92200-3808	WASHER,30.5X52X1.5

KAWASAKI

2011

ULTRA 300X(JT1500HBF)

CYLINDER HEAD

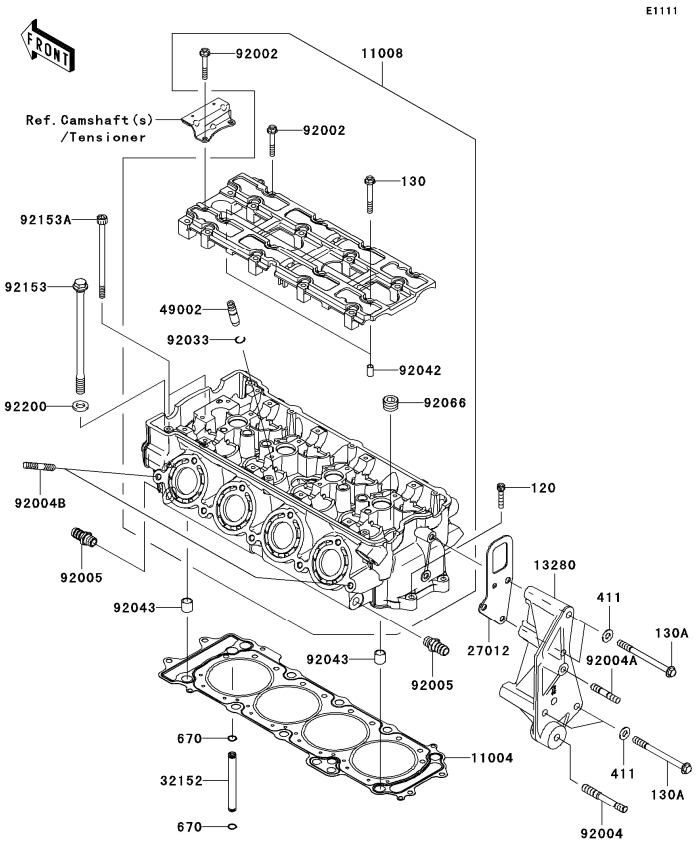

©2016 Kawasaki Motors Corp., U.S.A.

11004	11004-3724	GASKET-HEAD
11008	11008-3710	HEAD-COMP-CYLINDER
120	120CD0630	BOLT-SOCKET,6X30
130	130CD0650	BOLT-FLANGED,6X50
130A	130CD0895	BOLT-FLANGED,8X95
13280	13280-3763	HOLDER,BELT TENSIONER
27012	27012-3863	HOOK,ENGINE,RR
32152	32152-1544	PIPE,OIL
411	411S0800	WASHER-PLAIN,8MM
49002	49002-1140	GUIDE-VALVE
670	670D1507	O RING,7MM
92002	92002-1756	BOLT,6X40
92004	92004-0023	STUD,10X55
92004A	92004-1253	STUD,8X33
92004B	92004-3743	STUD,8X30
92005	92005-3714	FITTING
92033	92033-1247	RING-SNAP
92042	92042-007	PIN,DOWEL,6.3X8X14
92043	92043-1593	PIN,14X14
92066	92066-0002	PLUG,PT1/2X12.5
92153	92153-3730	BOLT,FLANGED,11X174
92153A	92153-3731	BOLT,SOCKET,7X126
92200	92200-0727	WASHER,11.5X20.5X3.2

KAWASAKI

2011

ULTRA 300X(JT1500HBF)

CYLINDER HEAD COVER

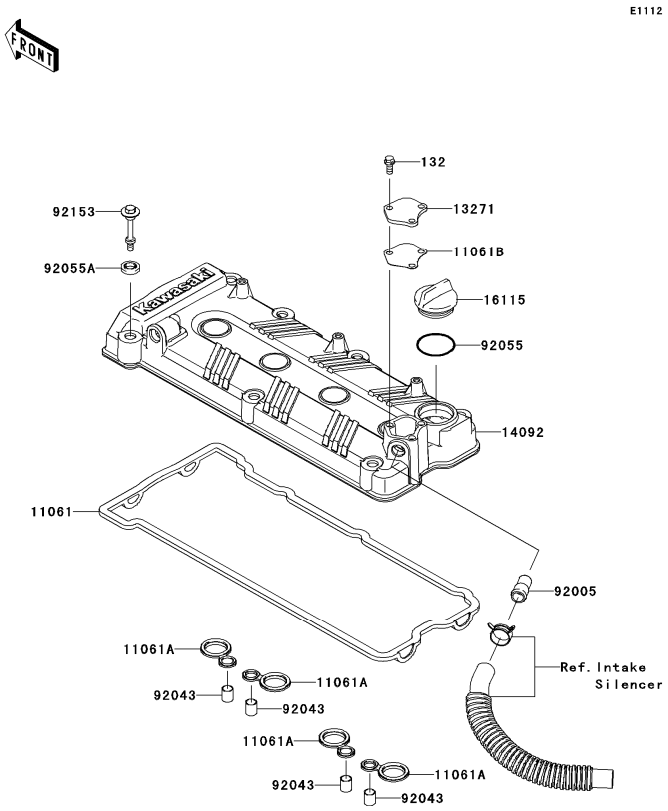

11061	11061-0090	GASKET,HEAD COVER
11061A	11061-0105	GASKET,SPARK PLUG HOLE
11061B	11061-3728	GASKET,PLATE
132	132BD0614	BOLT-FLANGED-SMALL,6X14
13271	13271-3898	PLATE
14092	14092-0836	COVER,HEAD
16115	16115-1064	CAP-OIL FILLER
92005	92005-3741	FITTING
92043	92043-4009	PIN,10.1X12X14
92055	92055-1295	RING-O,38X1.9
92055A	92055-1352	RING-O,HEAD COVER BOLT
92153	92153-3706	BOLT,HEAD COVER

©2016 Kawasaki Motors Corp., U.S.A.

KAWASAKI

2011

ULTRA 300X(JT1500HBF)

CYLINDER/PISTON(S)

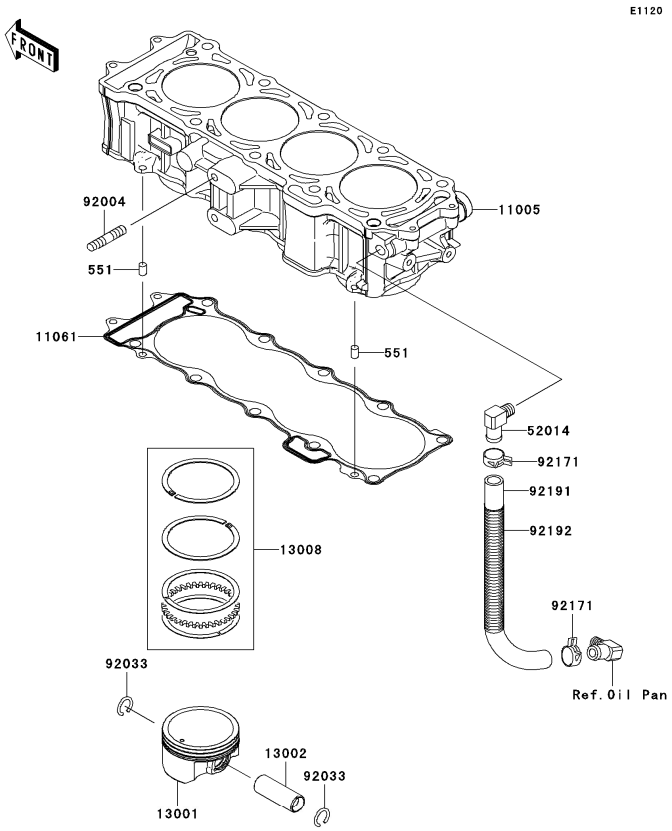

11005	11005-3770	CYLINDER-ENGINE
11061	11061-3770	GASKET,CYLINDER BASE
13001	13001-3741	PISTON-ENGINE
13002	13002-1131	PIN-PISTON
13008	13008-1196	RING-SET-PISTON
52014	52014-3717	ELBOW
551	551R0812	PIN-DOWEL
92004	92004-3759	STUD,10X32
92033	92033-1188	RING-SNAP
92171	92171-3710	CLAMP,TUBE
92191	92191-3983	TUBE,BREATHER
92192	92192-1083	TUBE,CORRUGATED,L=265

©2016 Kawasaki Motors Corp., U.S.A.

KAWASAKI

2011

ULTRA 300X(JT1500HBF)

DECALS(L.GREEN)(HBF)

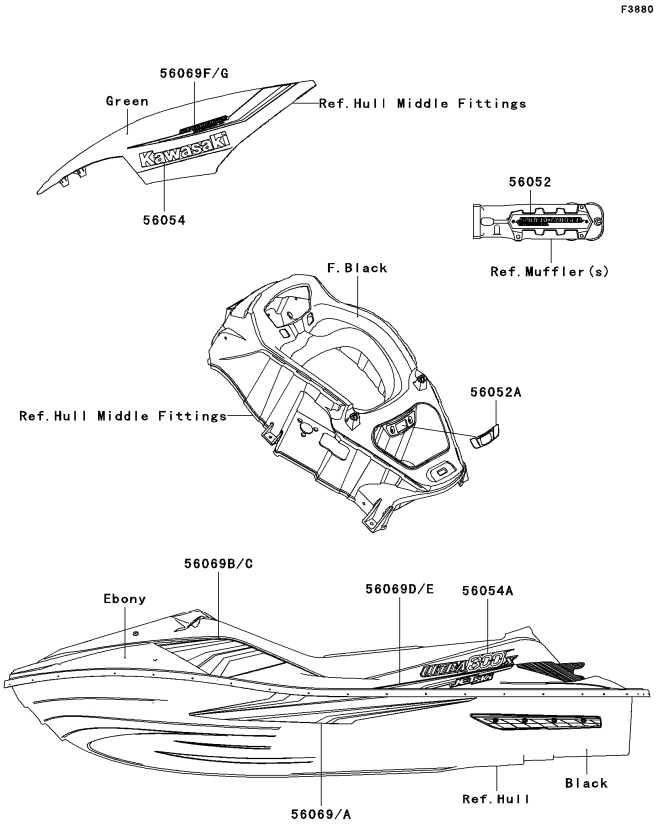

©2016 Kawasaki Motors Corp., U.S.A.

56052	56052-3877	MARK,SUPERCHARGED
56052A	56052-3878	MARK,IMMOBILIZER
56054	56054-3750	MARK,DECK,KAWASAKI
56054A	56054-3752	MARK,DECK,ULTRA300X
56069	56069-3877	PATTERN,HULL,LH
56069A	56069-3878	PATTERN,HULL,RH
56069B	56069-3879	PATTERN,DECK,FR,LH
56069C	56069-3880	PATTERN,DECK,FR,RH
56069D	56069-3881	PATTERN,DECK,RR,LH
56069E	56069-3882	PATTERN,DECK,RR,RH
56069F	56069-3883	PATTERN,HATCH COVER,LH
56069G	56069-3884	PATTERN,HATCH COVER,RH

KAWASAKI

2011

ULTRA 300X(JT1500HBF)

DRIVE SHAFT

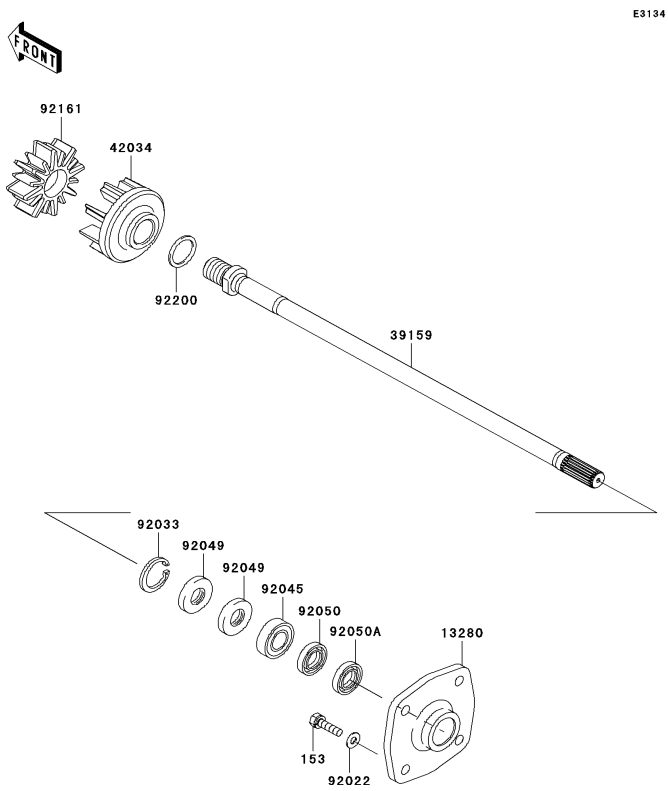

©2016 Kawasaki Motors Corp., U.S.A.

13280	13280-3756	HOLDER
153	153R0830	BOLT-WS-SMALL,8X30
39159	39159-3744	SHAFT-DRIVE
42034	42034-3720	COUPLING
92022	92022-1964	WASHER,8.2X18X1.5
92033	92033-3713	RING-SNAP,42MM
92045	92045-0113	BEARING-BALL,60042RD
92049	92049-3707	SEAL-OIL,S620426
92050	92050-502	SEAL-OIL,SCY20368
92050A	92050-503	SEAL-OIL,SC20367
92161	92161-3797	DAMPER,COUPLING
92200	92200-3809	WASHER,30.5X38X2

KAWASAKI

2011

ULTRA 300X(JT1500HBF)

ELECTRICAL EQUIPMENT

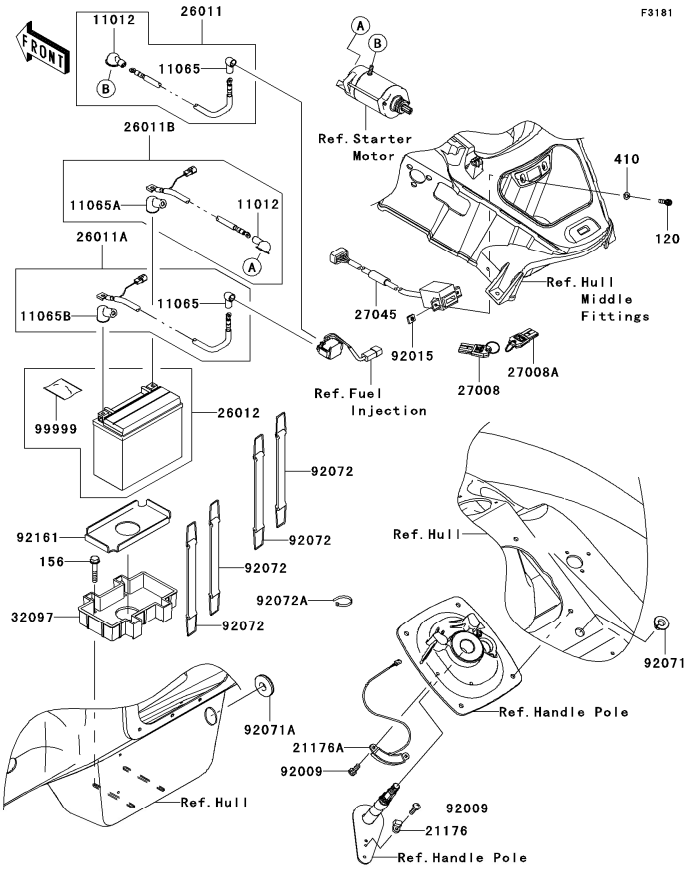

©2016 Kawasaki Motors Corp., U.S.A.

11012	11012-3004	CAP
11065	11065-3716	CAP
11065A	11065-3729	CAP,TERMINAL
11065B	11065-3732	CAP,TERMINAL
120	120R0516	BOLT-SOCKET,5X16
156	156R0635	BOLT-WP,6X35
21176	21176-3746	SENSOR,MAGNET
21176A	21176-3748	SENSOR,HOLE IC
26011	26011-0723	WIRE-LEAD,RELAY-STARTER
26011A	26011-0724	WIRE-LEAD,RELAY-BATTERY(+)
26011B	26011-3915	WIRE-LEAD,BATTERY(-)-STARTER
26012	26012-3730	BATTERY,YTX20L-BS,12V 18AH
27008	27008-3767	FPO MODE KEY
27008A	27008-3768	SLO MODE KEY
27045	27045-3755	SWITCH-ASSY
32097	32097-3709	CASE-BATTERY
410	410S0500	W-PLAIN-S,5MM
92009	92009-3868	SCREW,5X16
92015	92015-3830	NUT,CLIP,5MM
92071	92071-3826	GROMMET
92071A	92071-3840	GROMMET
92072	92072-3805	BAND,340X22
92072A	92072-3882	BAND,L=100.08
92161	92161-3762	DAMPER,BATTERY CASE
99999	99999-3719	BOLT NUT KIT

KAWASAKI

2011

ULTRA 300X(JT1500HBF)

ENGINE COVER(S)

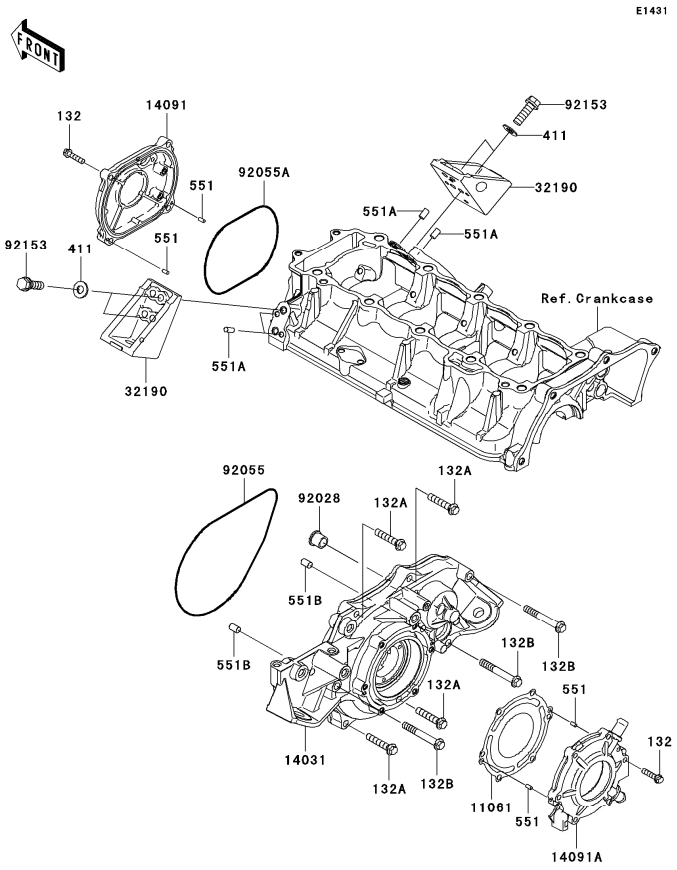

©2016 Kawasaki Motors Corp., U.S.A.

11061	11061-3709	GASKET,OUTPUT COVER
132	132BD0625	BOLT-FLANGED-SMALL,6X25
132A	132BD0840	BOLT-FLANGED-SMALL,8X40
132B	132BD0860	BOLT-FLANGED-SMALL,8X60
14031	14031-3738	COVER-GENERATOR
14091	14091-3763	COVER,PULS
14091A	14091-3793	COVER,OUTPUT
32190	32190-3703	BRACKET-ENGINE
411	411S0800	WASHER-PLAIN,8MM
551	551R0408	PIN-DOWEL
551A	551R0612	PIN-DOWEL
551B	551R0812	PIN-DOWEL
92028	92028-3718	BUSHING
92055	92055-3761	RING-O,196X3
92055A	92055-3762	RING-O,120X3
92153	92153-3722	BOLT,FLANGED,8X30

KAWASAKI

2011

ULTRA 300X(JT1500HBF)

ENGINE MOUNT

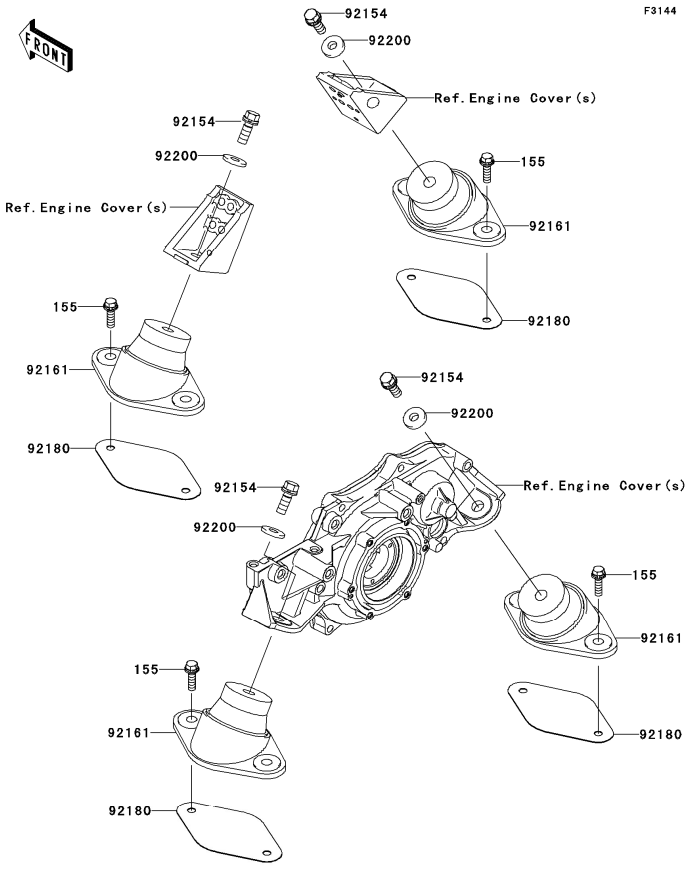

©2016 Kawasaki Motors Corp., U.S.A.

155	155R0830	BOLT-WSP-SMALL,8X30
92154	92154-3715	BOLT,WSP,10X30
92161	92161-3789	DAMPER,ENGINE MOUNT
92180	92180-3716	SHIM,T=1.0
92200	92200-3798	WASHER,10.5X26X4

KAWASAKI

2011

ULTRA 300X(JT1500HBF)

FUEL INJECTION

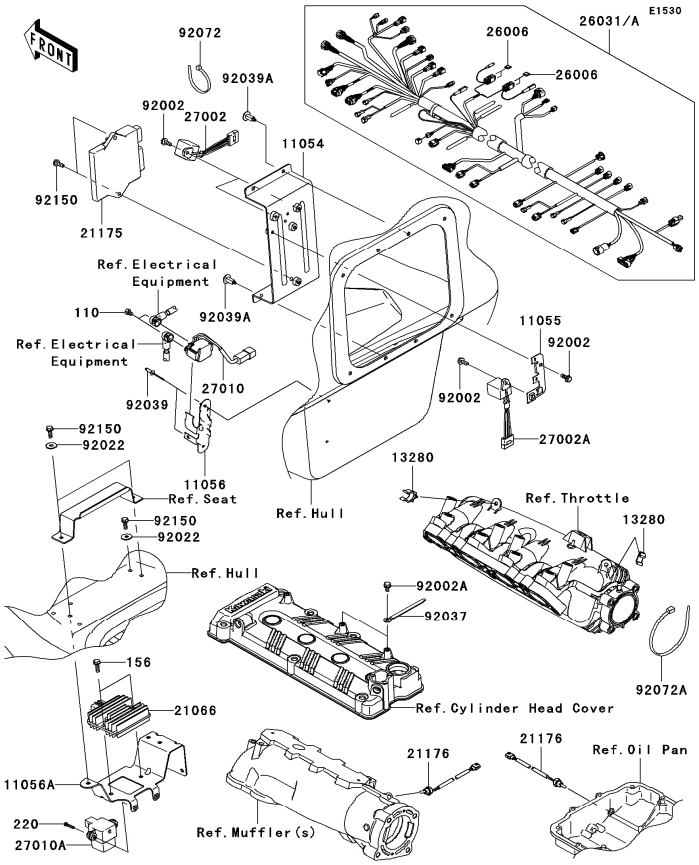

©2016 Kawasaki Motors Corp., U.S.A.

110	110R0608	BOLT,6X8
11054	11054-3743	BRACKET,ECU&RELAY
11055	11055-3713	BRACKET,FUSE
11056	11056-1114	BRACKET,SWITCH
11056A	11056-3702	BRACKET,REGULATOR&VDS
13280	13280-3760	HOLDER,HARNESS
156	156R0620	BOLT-WP,6X20
21066	21066-3718	REGULATOR-VOLTAGE
21175	21175-3744	CONTROL UNIT-ELECTRONIC
21176	21176-3774	SENSOR,TEMP
220	220R0420	SCREW-PAN-CROSS,4X20
26006	26006-3704	FUSE,MINI BLADE,20A,YELLOW
26031	26031-1223	HARNESS
27002	27002-3703	RELAY-ASSY
27002A	27002-3704	RELAY-ASSY
27010	27010-0710	SWITCH
27010A	27010-3785	SWITCH,VDS
92002	92002-3728	BOLT,6X16
92002A	92002-3763	BOLT,6X12
92022	92022-3710	WASHER,6.5X20X1.5
92037	92037-3736	CLAMP,L=100
92039	92039-3714	RIVET
92039A	92039-3788	RIVET
92072	92072-0105	BAND,L=188.85
92072A	92072-3883	BAND,L=372.24
92150	92150-3729	BOLT,6X18

KAWASAKI

2011

ULTRA 300X(JT1500HBF)

FUEL PUMP

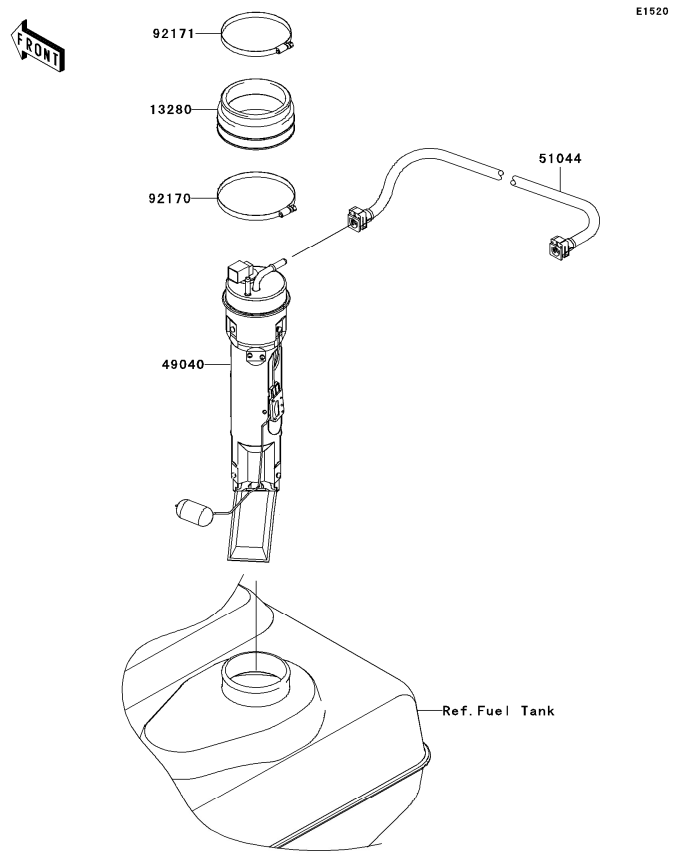

©2016 Kawasaki Motors Corp., U.S.A.

13280	13280-0729	HOLDER
49040	49040-3720	PUMP-FUEL
51044	51044-3707	TUBE-ASSY,FUEL
92170	92170-3760	CLAMP
92171	92171-3716	CLAMP

KAWASAKI

2011

ULTRA 300X(JT1500HBF)

FUEL TANK

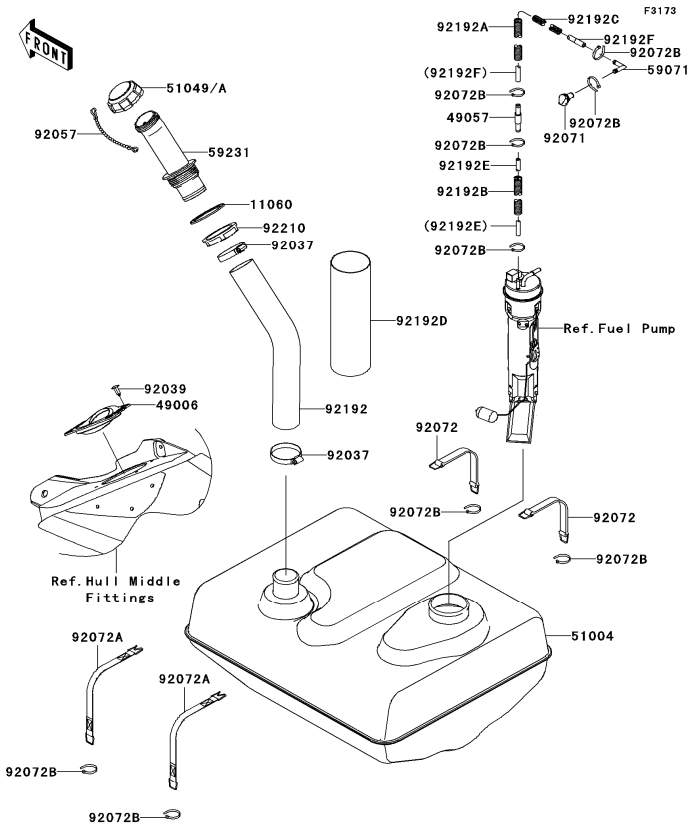

©2016 Kawasaki Motors Corp., U.S.A.

11060	11060-3780	GASKET,FUEL-FILLER
49006	49006-3719	BOOT
49057	49057-3707	VALVE-RELIEF
51004	51004-3749	TANK-FUEL
51049A	51049-3726	CAP-TANK,FUEL
59071	59071-3736	JOINT
59231	59231-3727	FILLER,FUEL TANK
92037	92037-3738	CLAMP
92039	92039-3788	RIVET
92057	92057-3704	CHAIN,COVER,L=100
92071	92071-3841	GROMMET
92072	92072-3845	BAND
92072A	92072-3847	BAND
92072B	92072-3882	BAND,L=100.08
92192	92192-1044	TUBE,FUEL TANK-FILLER
92192A	92192-3748	TUBE,CORRUGATED,15.3X20.6X650
92192B	92192-3749	TUBE,CORRUGATED,L=120
92192C	92192-3788	TUBE,CORRUGATED,L=350
92192D	92192-3822	TUBE,86X89X300
92192E	92192-3840	TUBE,5.8X10.8X100
92192F	92192-3849	TUBE,5.8X10.8X1000
92210	92210-3802	NUT,FUEL FILLER

KAWASAKI

2011

ULTRA 300X(JT1500HBF)

GENERATOR

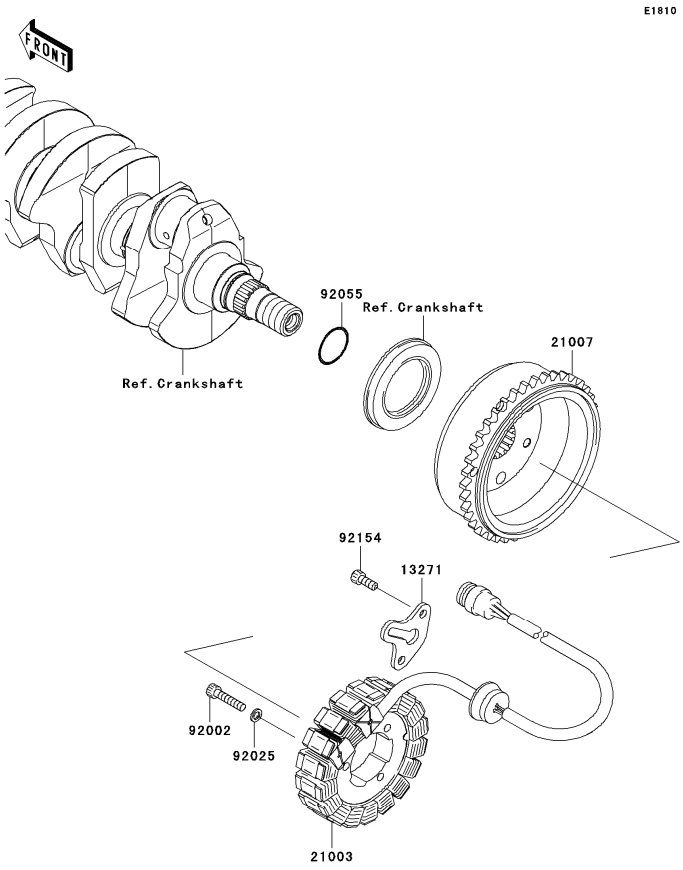

©2016 Kawasaki Motors Corp., U.S.A.

13271	13271-3847	PLATE
21003	21003-3747	STATOR
21007	21007-3748	ROTOR
92002	92002-1537	BOLT,6X28
92025	92025-1502	SHIM,T=1.4
92055	92055-1619	RING-O,27.7X2.4
92154	92154-3714	BOLT,SOCKET,6X16

KAWASAKI

2011

ULTRA 300X(JT1500HBF)

HANDLE POLE

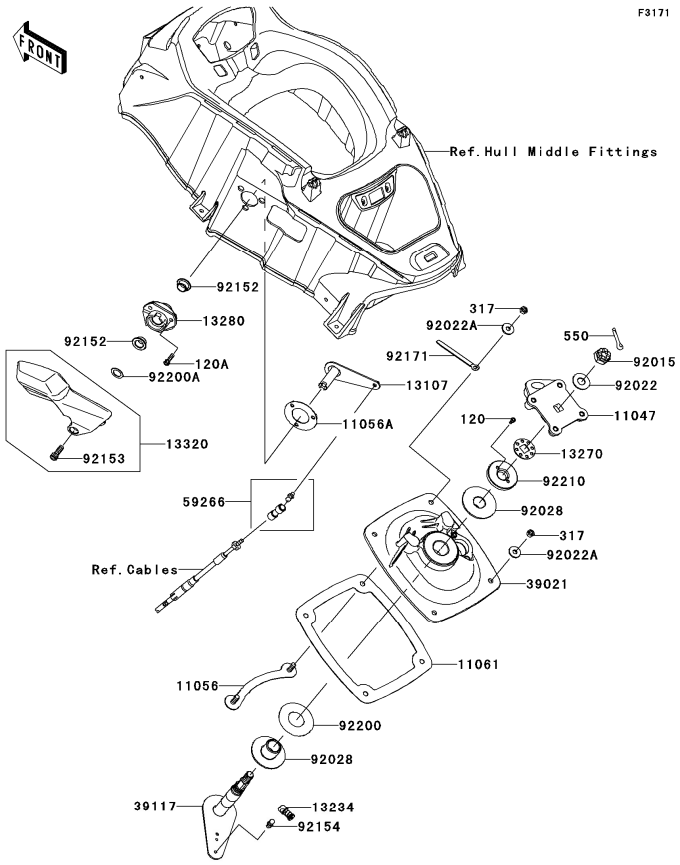

©2016 Kawasaki Motors Corp., U.S.A.

11047	11047-3759	BRACKET,HANDLE HOLDER
11056	11056-3712	BRACKET,HANDLE POLE BRACKET
11056A	11056-3713	BRACKET
11061	11061-3739	GASKET,HANDLE POLE BRACKET
120	120R0510	BOLT-SOCKET,5X10
120A	120R0620	BOLT-SOCKET,6X20
13107	13107-3799	SHAFT
13234	13234-3713	SHAFT-COMP
13270	13270-3808	PLATE,STEERING NUT
13280	13280-3752	HOLDER
13320	13320-3720	LEVER-ASSY,REVERSE
317	317R0800	NUT-HEX-SMALL
39021	39021-3716	BRACKET-HANDLE POLE
39117	39117-3715	SHAFT-STRG
550	550S3035	PIN-COTTER,3X35
59266	59266-3710	JOINT-BALL
92015	92015-3805	NUT,CASTLE,14MM
92022	92022-3738	WASHER,15X34X2.0
92022A	92022-3744	WASHER,8.4X23X2.5
92028	92028-3748	BUSHING,STEERING
92152	92152-3748	COLLAR
92153	92153-3739	BOLT,SOCKET,8X25
92154	92154-3710	BOLT,BALL,6MM
92171	92171-3717	CLAMP,L=150
92200	92200-3718	WASHER,32.5X70X2
92200A	92200-3800	WASHER,16.5X25X1
92210	92210-3800	NUT,STEERING SHAFT,22MM

KAWASAKI

2011

ULTRA 300X(JT1500HBF)

HANDLEBAR

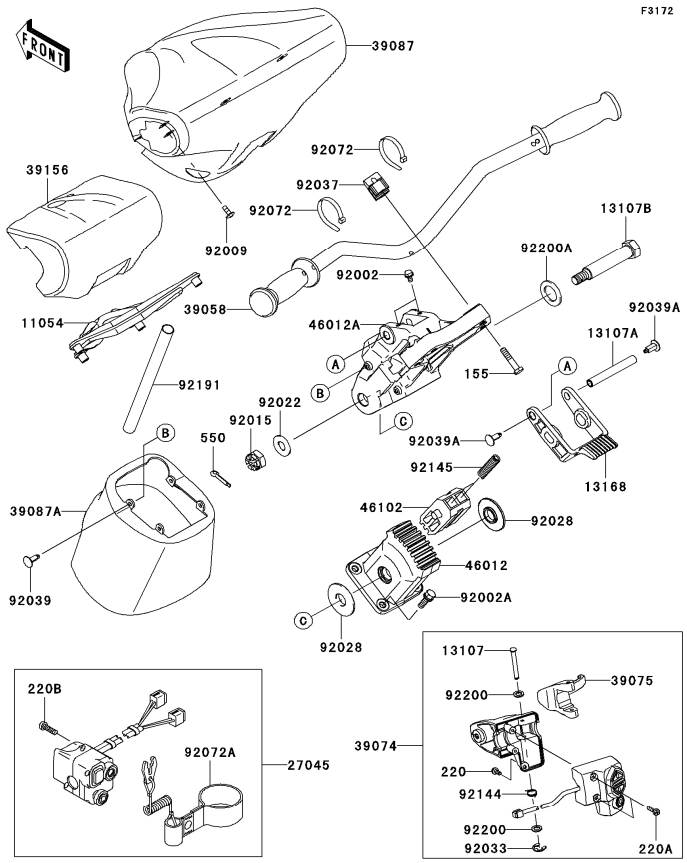

©2016 Kawasaki Motors Corp., U.S.A.

11054	11054-3710	BRACKET,HANDLE PAD
13107	13107-3766	SHAFT
13107A	13107-3795	SHAFT
13107B	13107-3803	SHAFT,HANDLE HOLDER PIVOT
13168	13168-3754	LEVER
155	155R0850	BOLT-WSP-SMALL,8X50
220	220R0514	SCREW-PAN-CROSS,5X14
220A	220R0525	SCREW-PAN-CROSS,5X25
220B	220R0530	SCREW-PAN-CROSS,5X30
27045	27045-3767	SWITCH-ASSY,STOP&START
39058	39058-3746-6Z	HANDLE-COMP,F.BLACK
39074	39074-3729	LEVER-ASSY-THROTTLE
39075	39075-3715	LEVER-THROTTLE
39087	39087-3735-6Z	PAD-HANDLE,F.BLACK
39087A	39087-3737-6Z	PAD-HANDLE,F.BLACK
39156	39156-3851	PAD,HANDLE
46012	46012-3730	HOLDER-HANDLE,LWR
46012A	46012-3733	HOLDER-HANDLE,UPP
46102	46102-3733	ROD,HANDLE POSITION
550	550S3035	PIN-COTTER,3X35
92002	92002-3763	BOLT,6X12
92002A	92002-3774	BOLT,8X25
92009	92009-3781	SCREW,6X20
92015	92015-3805	NUT,CASTLE,14MM
92022	92022-3738	WASHER,15X34X2.0
92028	92028-3743	BUSHING
92033	92033-3723	RING-SNAP
92037	92037-503	CLAMP,HANDLEBAR
92039	92039-3787	RIVET
92039A	92039-3788	RIVET
92072	92072-0105	BAND,L=188.85
92072A	92072-3809	BAND,TETHER SWITCH
92144	92144-3749	SPRING
92145	92145-3723	SPRING
92191	92191-3792	TUBE,22X24X200
92200	92200-3738	WASHER
92200A	92200-3802	WASHER,21X34X2

KAWASAKI

2011

ULTRA 300X(JT1500HBF)

HULL

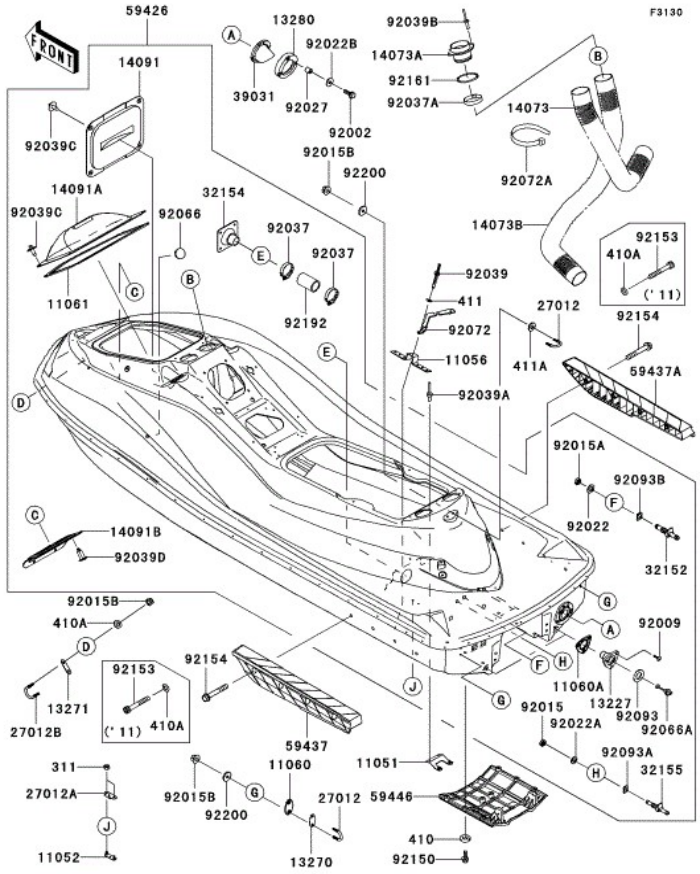

®2016 Kawasaki Motors Corp., U.S.A.

92072	92072-3814	BAND,314X18
92072A	92072-3884	BAND,L=608.22
92093	92093-3720	SEAL
92093A	92093-3783	SEAL
92093B	92093-3784	SEAL
92150	92150-3775	BOLT,SOCKET,6X18
92153	92153-3746	BOLT,SOCKET,8X55
92161	92161-3769	DAMPER
92192	92192-3756	TUBE,39X51X78
92200	92200-3779	WASHER

11051	11051-3802	BRACKET,BREATHER-BILGE
11052	11052-3712	BRACKET,RR DUCT
11056	11056-3722	BRACKET,WATER MUFFLER
11060	11060-3800	GASKET,U HOOK,RR
11060A	11060-3801	GASKET,DRAIN PLUG
11061	11061-3754	GASKET,BATTERY COVER
13227	13227-3721-6Z	HOUSING,DRAIN PLUG,F.BLACK
13270	13270-3860	PLATE
13271	13271-3724	PLATE
13280	13280-3718	HOLDER,EXHAUST VALVE
14073	14073-3804	DUCT,L=800
14073A	14073-3805	DUCT
14073B	14073-3836	DUCT,L=1000
14091	14091-3786	COVER,ECU
14091A	14091-3809	COVER,BATTERY
14091B	14091-3819	COVER,STORAGE CASE
27012	27012-3797	HOOK
27012A	27012-3816	HOOK
27012B	27012-3821	HOOK
311	311R0600	NUT-HEX,6MM
32152	32152-3749	PIPE
32154	32154-3714	PIPE,DRIVE SHAFT
32155	32155-3702	PIPE,COOLING
39031	39031-3704	CAP-END
410	410S0600	WASHER-PLAIN-SMALL,6MM
410A	410S0800	WASHER-PLAIN-SMALL,8MM
411	411S0500	WASHER-PLAIN,5MM
411A	411S0800	WASHER-PLAIN,8MM
59426	59426-3972-43D	HULL-COMP,BLACK/EBONY (US)
59437	59437-3749-6Z	STABILIZER,LH,F.BLACK
59437A	59437-3750-6Z	STABILIZER,RH,F.BLACK
59446	59446-3760	COVER-JET PUMP
92002	92002-3755	BOLT,6X20
92009	92009-3849	SCREW,TAPPING,4X16
92015	92015-1477	NUT,16MM
92015A	92015-1589	NUT,20MM
92015B	92015-1933	NUT,FLANGED,8MM
92022	92022-1116	WASHER,20.3X36X2.3
92022A	92022-1903	WASHER,17.3X30X2.3
92022B	92022-567	WASHER
92027	92027-3705	COLLAR,6.2X10X10
92037	92037-3009	CLAMP
92037A	92037-3738	CLAMP
92039	92039-3741	RIVET
92039A	92039-3755	RIVET
92039B	92039-3775	RIVET
92039C	92039-3785	RIVET
92039D	92039-3788	RIVET
92066	92066-1306	PLUG
92066A	92066-3783-6Z	PLUG,RR,DRAIN,F.BLACK

KAWASAKI

2011

ULTRA 300X(JT1500HBF)

HULL FRONT FITTINGS

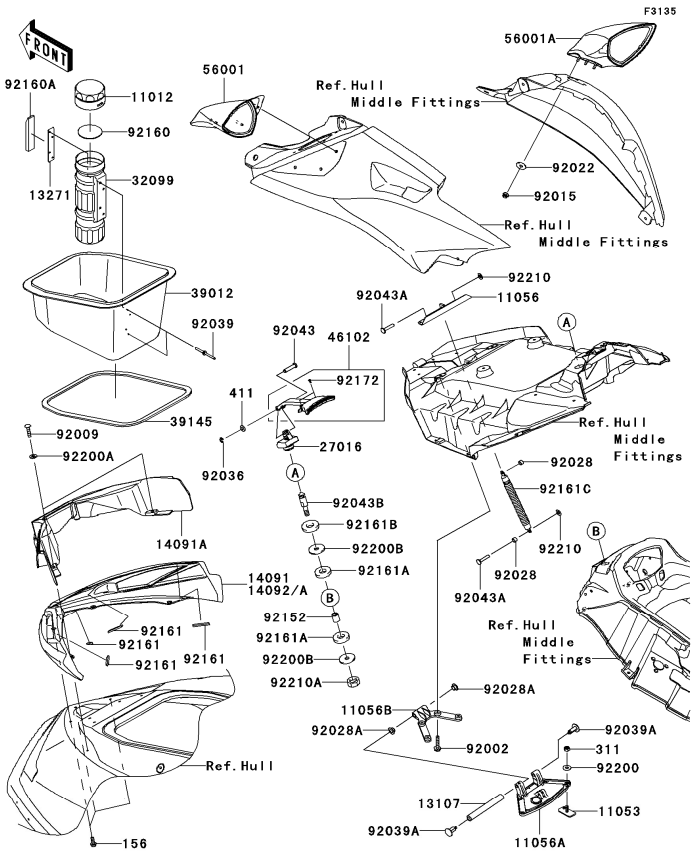

©2016 Kawasaki Motors Corp., U.S.A.

11012	11012-3766	CAP,FIRE EXTINGUISHER
11053	11053-3776	BRACKET
11056	11056-3703	BRACKET
11056A	11056-3725	BRACKET
11056B	11056-3726	BRACKET
13107	13107-3802	SHAFT,FRONT HINGE
13271	13271-3775	PLATE,FIRE EXTINGUISHER
14091A	14091-3828	COVER,FR,INSIDE
14092A	14092-0775-777	COVER,FR,TOP,L.GREEN
156	156R0516	BOLT-WP,5X16
27016	27016-3761	LOCK-ASSY,HATCH
311	311R0600	NUT-HEX,6MM
32099	32099-3769	CASE,FIRE EXTINGUISHER
39012	39012-3744	CASE-STORAGE
39145	39145-3807	TRIM-SEAL,L=1627
411	411S0600	WASHER-PLAIN,6MM
46102	46102-3734	ROD,HATCH LOCK
56001	56001-3727-6Z	MIRROR-ASSY,LH,F.BLACK
56001A	56001-3728-6Z	MIRROR-ASSY,RH,F.BLACK
92002	92002-3726	BOLT,6X30
92009	92009-3842	SCREW,TAPPING,6X20
92015	92015-3766	NUT,LOCK,6MM
92022	92022-3710	WASHER,6.5X20X1.5
92028	92028-3765	BUSHING
92028A	92028-3770	BUSHING
92036	92036-518	RING-SNAP
92039	92039-3783	RIVET
92039A	92039-3788	RIVET
92043	92043-3732	PIN,6X27.5
92043A	92043-3748	PIN,6X33
92043B	92043-3760	PIN
92152	92152-0979	COLLAR,8.2X14X16.2
92160	92160-3814	DAMPER
92160A	92160-3821	DAMPER
92161	92161-1373	DAMPER,10X50X4
92161A	92161-3739	DAMPER
92161B	92161-3747	DAMPER
92161C	92161-3778	DAMPER,HATCH
92172	92172-3716	SCREW,3X8
92200	92200-3712	WASHER,6.5X16X1.0
92200A	92200-3775	WASHER,6.5X14.5X1.5
92200B	92200-3786	WASHER,8.5X32X2
92210	92210-3739	NUT,SPEED,6MM
92210A	92210-3742	NUT,LOCK,8MM

KAWASAKI

2011

ULTRA 300X(JT1500HBF)

HULL MIDDLE FITTINGS

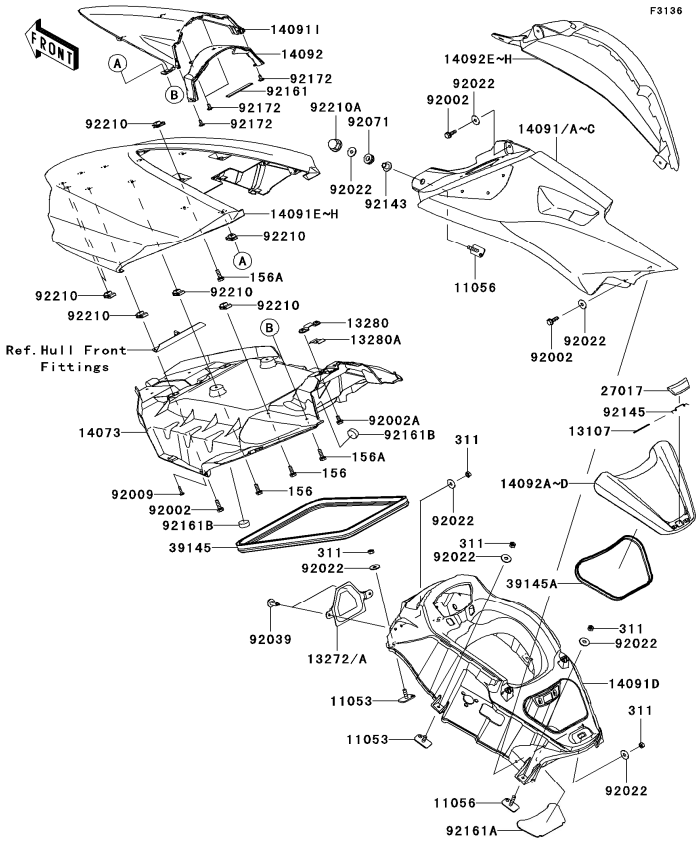

©2016 Kawasaki Motors Corp., U.S.A.

11053	11053-3776	BRACKET
11056	11056-3724	BRACKET
13107	13107-3790	SHAFT
13272A	13272-3713	PLATE,INTAKE COVER
13280	13280-3749	HOLDER,ROD
13280A	13280-3751	HOLDER,ROD
14073	14073-3837	DUCT,HATCH,INNER
14091C	14091-3780-777	COVER,SIDE,LH,L.GREEN
14091D	14091-3823-6Z	COVER,CENTER,F.BLACK
14091H	14091-3824-777	COVER,FR HATCH,L.GREEN
14091I	14091-3825	COVER,METER
14092	14092-0776-H8	COVER,METER,RR,EBONY
14092D	14092-3701-777	COVER,CENTER STORAGE,L.GREEN
14092H	14092-3708-777	COVER,SIDE,RH,L.GREEN
156	156R0618	BOLT-WP,6X18
156A	156R0620	BOLT-WP,6X20
27017	27017-3726	LOCK,CENTER STORAGE
311	311R0600	NUT-HEX,6MM
39145	39145-3793	TRIM-SEAL
39145A	39145-3802	TRIM-SEAL,L=720
92002	92002-3755	BOLT,6X20
92002A	92002-3763	BOLT,6X12
92009	92009-3849	SCREW,TAPPING,4X16
92022	92022-3710	WASHER,6.5X20X1.5
92039	92039-3788	RIVET
92071	92071-3716	GROMMET
92143	92143-3750	COLLAR
92145	92145-3729	SPRING
92161	92161-0968	DAMPER,16X100X3.18
92161A	92161-3773	DAMPER,CENTER STORAGE
92161B	92161-3790	DAMPER
92172	92172-3714	SCREW,5X12
92210	92210-3768	NUT,6MM
92210A	92210-3785	NUT,CAP,6MM

KAWASAKI

2011

ULTRA 300X(JT1500HBF)

HULL REAR FITTINGS

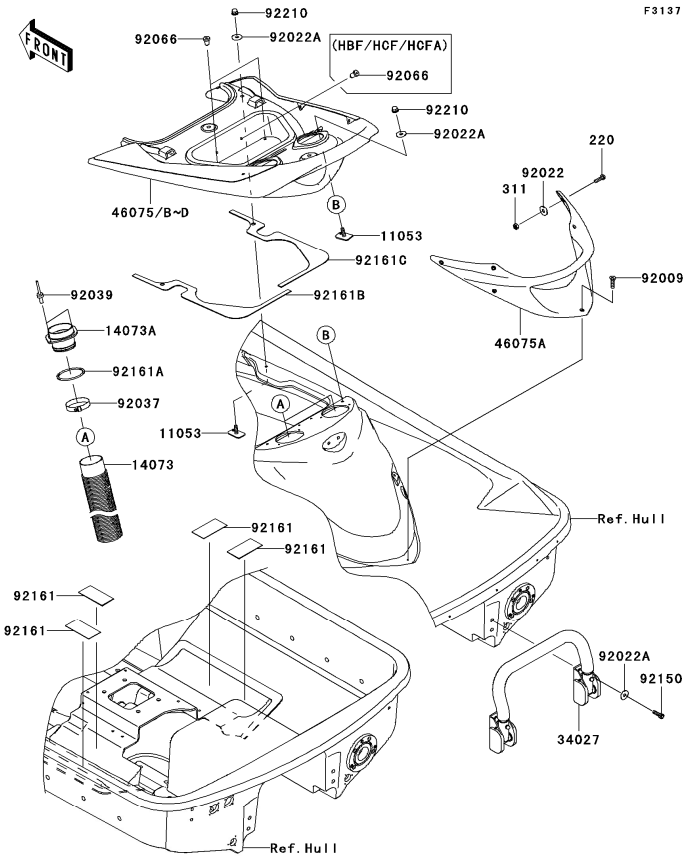

©2016 Kawasaki Motors Corp., U.S.A.

11053	11053-3776	BRACKET
14073	14073-3804	DUCT,L=800
14073A	14073-3805	DUCT
220	220R0620	SCREW-PAN-CROS,6X20
311	311AA0600	NUT-HEX,6MM
34027	34027-3710	STEP-ASSY
46075A	46075-3765	GRIP,HANDLE
46075B	46075-3766-H8	GRIP,RR,UPP,EBONY
92009	92009-3842	SCREW,TAPPING,6X20
92022	92022-1557	WASHER,6.5X20X1.6
92022A	92022-3710	WASHER,6.5X20X1.5
92037	92037-3738	CLAMP
92039	92039-3775	RIVET
92066	92066-3773	PLUG
92150	92150-3775	BOLT,SOCKET,6X18
92161	92161-3728	DAMPER
92161A	92161-3769	DAMPER
92161B	92161-3781	DAMPER
92161C	92161-3782	DAMPER
92210	92210-3785	NUT,CAP,6MM

KAWASAKI

2011

ULTRA 300X(JT1500HBF)

IGNITION SYSTEM

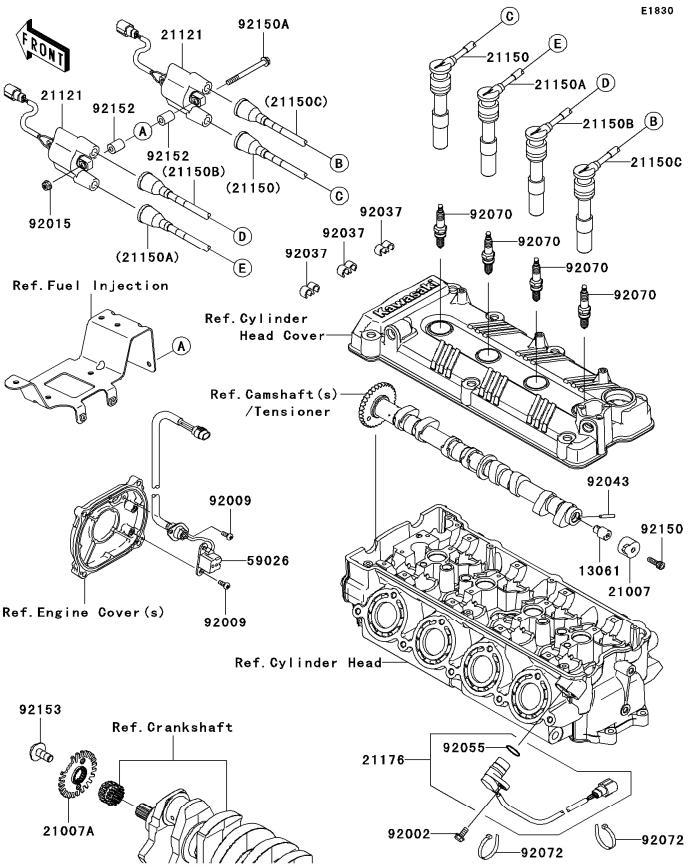

©2016 Kawasaki Motors Corp., U.S.A.

13061	13061-1687	BOSS,CAM SENSOR
21007	21007-3742	ROTOR,EX CAM
21007A	21007-3747	ROTOR,EX CAM
21121	21121-3722	COIL-IGNITION
21150	21150-3731	CORD-ASSY,#1,L=340
21150A	21150-3732	CORD-ASSY,#2,L=450
21150B	21150-3733	CORD-ASSY,#3,L=540
21150C	21150-3734	CORD-ASSY,#4,L=600
21176	21176-1077	SENSOR,CAM ANGLE
59026	59026-3702	COIL-PULSING
92002	92002-3728	BOLT,6X16
92009	92009-1296	SCREW,5X12
92015	92015-3767	NUT,6MM
92037	92037-1603	CLAMP,CORD
92043	92043-1575	PIN
92055	92055-1639	RING-O
92070	92070-3707	PLUG-SPARK,PMR9B(NGK)
92072	92072-0105	BAND,L=188.85
92150	92150-1645	BOLT,6X18
92150A	92150-3753	BOLT,6X70
92152	92152-3738	COLLAR
92153	92153-0549	BOLT,FLANGED,8X23

KAWASAKI

2011

ULTRA 300X(JT1500HBF)

INTAKE SILENCER

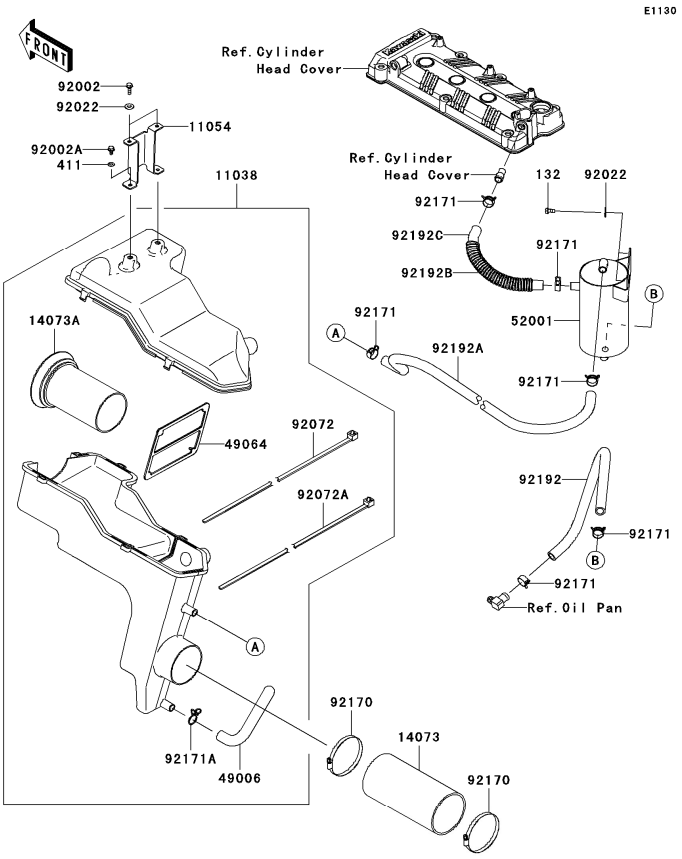

©2016 Kawasaki Motors Corp., U.S.A.

11038	11038-3710	CASE-ASSY-AIR FILTER
11054	11054-3745	BRACKET,AIR BOX
132	132BD0614	BOLT-FLANGED-SMALL,6X14
14073	14073-3838	DUCT,A/C-COMPRESSOR
14073A	14073-3844	DUCT,INLET
411	411S0600	WASHER-PLAIN,6MM
49006	49006-3720	BOOT
49064	49064-3704	FILTER-AIR
52001	52001-3741	TANK-OIL,SEPARATOR
92002	92002-3755	BOLT,6X20
92002A	92002-3763	BOLT,6X12
92022	92022-3710	WASHER,6.5X20X1.5
92072	92072-0708	BAND,L=914
92072A	92072-0709	BAND,L=619
92170	92170-3760	CLAMP
92171	92171-3710	CLAMP,TUBE
92171A	92171-3711	CLAMP,BOOT
92192	92192-1067	TUBE,OIL TANK-OIL PAN
92192A	92192-3769	TUBE,OIL TANK-A/C
92192B	92192-3832	TUBE,CORRUGATED,L=160
92192C	92192-3854	TUBE,HEAD-OIL TANK

KAWASAKI

2011

ULTRA 300X(JT1500HBF)

INTER COOLER

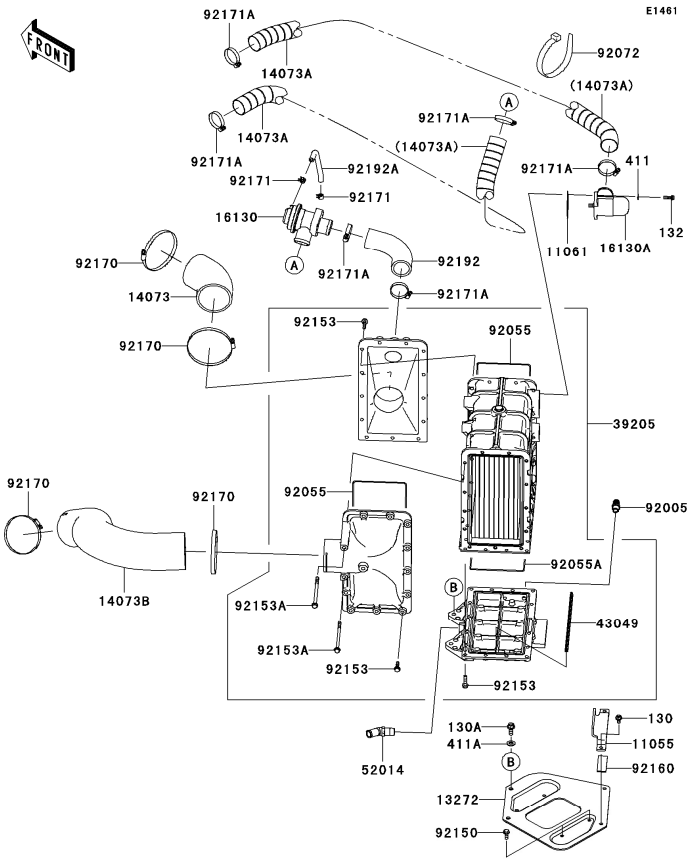

©2016 Kawasaki Motors Corp., U.S.A.

11055	11055-3714	BRACKET
11061	11061-3765	GASKET
130	130CD0612	BOLT-FLANGED,6X12
130A	130CD0820	BOLT-FLANGED,8X20
132	132BD0618	BOLT-FLANGED-SMALL,6X18
13272	13272-3721	PLATE
14073	14073-3823	DUCT,I/C-TH.
14073A	14073-3834	DUCT,BYPASS VALVE-A/C
14073B	14073-3839	DUCT,S/C-I/C
16130	16130-3703	VALVE-ASSY-RELIEF,AIR BYPASS
16130A	16130-3707	VALVE-ASSY-RELIEF,BLOW OFF
39205	39205-3702	HEAT EXCHANGER,INTER COOLER
411	411S0600	WASHER-PLAIN,6MM
411A	411S0800	WASHER-PLAIN,8MM
43049	43049-3719	PACKING
52014	52014-3714	ELBOW
92005	92005-3714	FITTING
92055	92055-3779	RING-O
92055A	92055-3780	RING-O
92072	92072-3883	BAND,L=372.24
92150	92150-3729	BOLT,6X18
92153	92153-3750	BOLT,FLANGED,6X25
92153A	92153-3751	BOLT,FLANGED,6X110
92160	92160-1075	DAMPER
92170	92170-3764	CLAMP
92171	92171-0720	CLAMP
92171A	92171-3725	CLAMP
92192	92192-3784	TUBE,I/C-ABV
92192A	92192-3846	TUBE,5.8X10.8X140

KAWASAKI

2011

ULTRA 300X(JT1500HBF)

JET PUMP

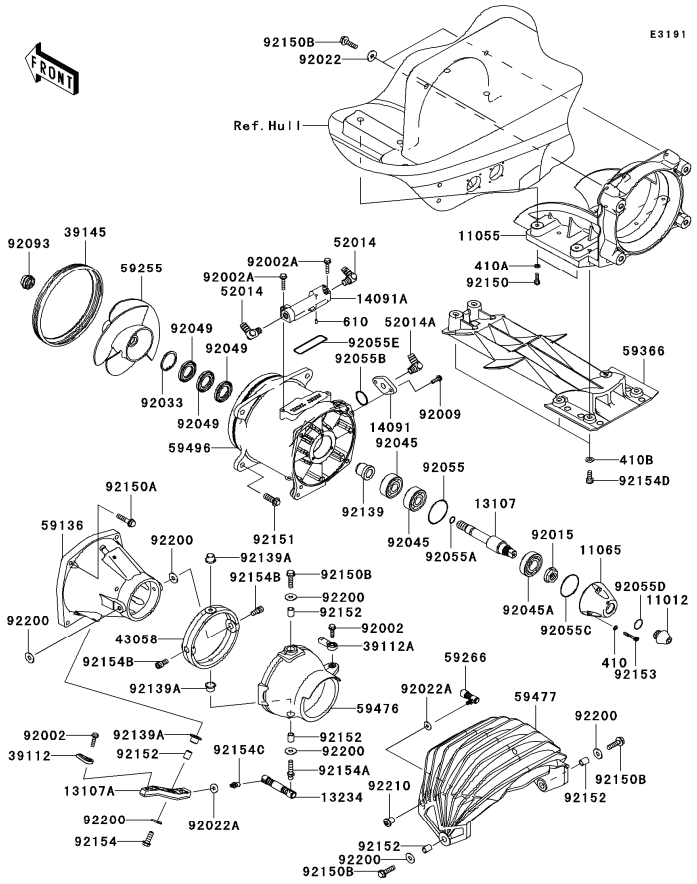

©2016 Kawasaki Motors Corp., U.S.A.

92154	92154-3705	BOLT,FLANGED,8X25
92154A	92154-3706	BOLT,BALL,8X30
92154B	92154-3707	BOLT,SOCKET,8X15
92154C	92154-3710	BOLT,BALL,6MM
92154D	92154-3711	BOLT,SOCKET,8X18
92200	92200-0174	WASHER,8.0X22.0X1.5
92210	92210-3789	NUT,6MM

11012	11012-3786	CAP
11055	11055-3710	BRACKET,PUMP
11065	11065-3733	CAP
13107	13107-0728	SHAFT
13107A	13107-3804	SHAFT
13234	13234-3712	SHAFT-COMP
14091	14091-3808	COVER,COOLING TUBE
14091A	14091-3817	COVER,VANE GUIDE
39112	39112-3703	RODEND-TIE
39112A	39112-3707	RODEND-TIE
39145	39145-3809	TRIM-SEAL
410	410S0500	W-PLAIN-S,5MM
410A	410S0600	WASHER-PLAIN-SMALL,6MM
410B	410S0800	WASHER-PLAIN-SMALL,8MM
43058	43058-3735	RING
52014	52014-3711	ELBOW
52014A	52014-3727	ELBOW
59136	59136-3768	NOZZLE-PUMP
59255	59255-3740	IMPELLER-COMP
59266	59266-3710	JOINT-BALL
59366	59366-3724	GRATE
59476	59476-3746	NOZZLE-STRG
59477	59477-3713	BUCKET-REVERSE
59496	59496-3767	VANE-GUIDE
610	610A0408	ROLLER,4X8
92002	92002-3714	BOLT,6X25
92002A	92002-3726	BOLT,6X30
92009	92009-3848	SCREW,6X20
92015	92015-1512	NUT,18MM
92022	92022-3744	WASHER,8.4X23X2.5
92022A	92022-567	WASHER
92033	92033-3730	RING-SNAP
92045	92045-3744	BEARING-BALL,6303R-6
92045A	92045-3745	BEARING-BALL,62/22 2RS
92049	92049-3739	SEAL-OIL
92055	92055-0183	RING-O,49.7X2.4
92055A	92055-025	RING-O,12X1.5
92055B	92055-1272	RING-O,27.7X1.9
92055C	92055-3741	RING-O
92055D	92055-3744	RING-O
92055E	92055-3784	RING-O,66.5X2.0
92093	92093-3749	SEAL
92139	92139-0767	BUSHING
92139A	92139-3720	BUSHING
92150	92150-3775	BOLT,SOCKET,6X18
92150A	92150-3792	BOLT,8X35
92150B	92150-3803	BOLT,FLANGED,8X30
92151	92151-3706	BOLT,10X30
92152	92152-3703	COLLAR,8.2X11.8X15
92153	92153-3742	BOLT,SOCKET,5X30

KAWASAKI

2011

ULTRA 300X(JT1500HBF)

LABELS

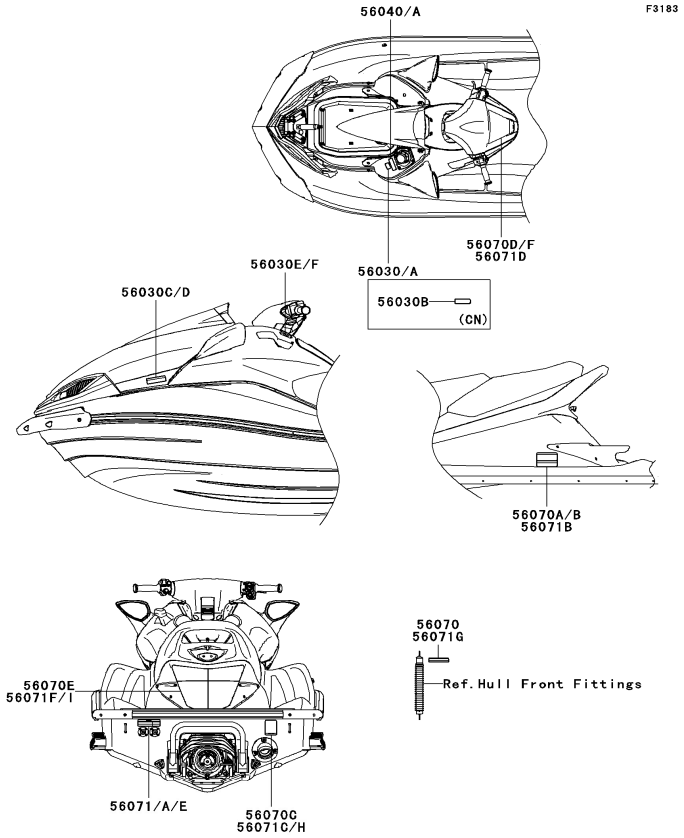

©2016 Kawasaki Motors Corp., U.S.A.

56030A	56030-1177	LABEL,GASOLINE (US)
56030B	56030-1178	LABEL,GASOLINE(FRENCH) (CN)
56030C	56030-3755	LABEL,FIRE EXTINGUISHER
56030D	56030-3757	LABEL,FIRE EXTINGUISHER(FRENCH) (CN)
56030E	56030-3815	LABEL,REVERSE
56030F	56030-3816	LABEL,REVERSE(FRENCH) (CN)
56040	56040-3972	LABEL-WARNING,GASOLINE
56040A	56040-3978	LABEL,GASOLINE(FRENCH) (CN)
56070	56070-3876	LABEL-WARNING,DAMPER
56070A	56070-3964	LABEL-WARNING,GRAB HANDLE&STEP
56070B	56070-3966	LABEL-WARNING,GRAB HANDLE&STEP(FR.) (CN)
56070C	56070-3986	LABEL-WARNING,RIGHTING
56070D	56070-3988	LABEL-WARNING,TETHER SWITCH
56070E	56070-3997	LABEL-WARNING,IMPORTANT SAFETY(FR.) (CN)
56070F	56070-3998	LABEL-WARNING,TETHER SWITCH(FR.) (CN)
56071	56071-0203	LABEL-WARNING,FLUSHING
56071A	56071-0205	LABEL-WARNING,FLUSHING(FR.) (CN)
56071G	56071-3737	LABEL-WARNING,DAMPER(FR.) (CN)
56071H	56071-3738	LABEL-WARNING,RIGHTING(FR.) (CN)
56071I	56071-3739	LABEL-WARNING,IMPORTANT SAFETY

KAWASAKI

2011

ULTRA 300X(JT1500HBF)

METERS

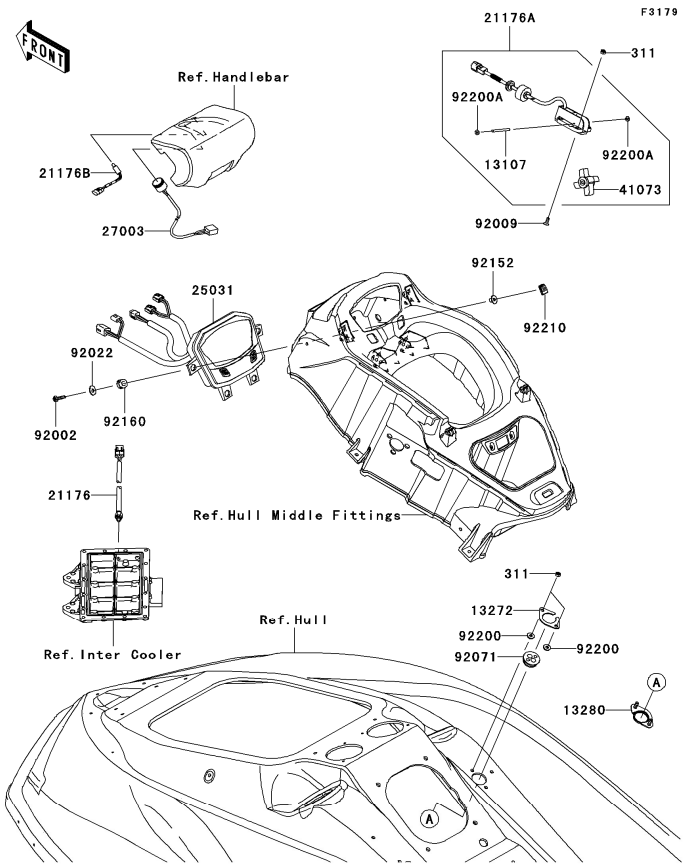

©2016 Kawasaki Motors Corp., U.S.A.

13107	13107-3807	SHAFT
13272	13272-3729	PLATE
13280	13280-0724	HOLDER
21176	21176-0072	SENSOR,TEMP
21176A	21176-3775	SENSOR,SPEED
21176B	21176-3778	SENSOR,AIR TEMP
25031	25031-3760	METER-ASSY
27003	27003-3706	HORN
311	311R0600	NUT-HEX,6MM
41073	41073-3701	WHEEL-ASSY,PADDLE
92002	92002-3714	BOLT,6X25
92009	92009-3703	SCREW,6X16
92022	92022-3710	WASHER,6.5X20X1.5
92071	92071-3790	GROMMET,HARNESS
92152	92152-3755	COLLAR
92160	92160-1167	DAMPER
92200	92200-1543	WASHER,6.5X16X2.0
92200A	92200-3805	WASHER
92210	92210-3768	NUT,6MM

KAWASAKI

2011

ULTRA 300X(JT1500HBF)

MUFFLER(S)

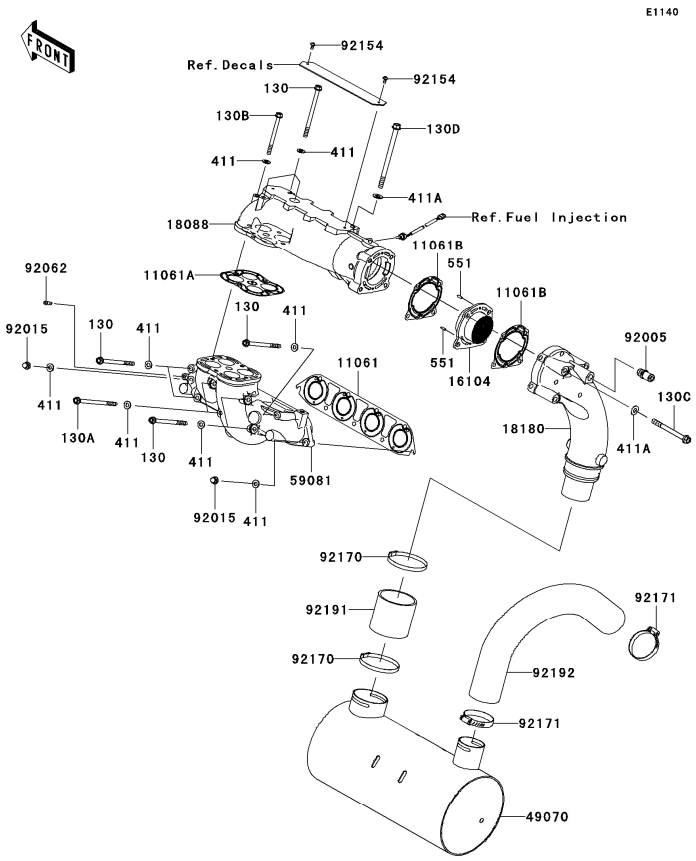

©2016 Kawasaki Motors Corp., U.S.A.

11061	11061-3742	GASKET,MANIFOLD EXHAUST
11061A	11061-3762	GASKET,PIPE EXHAUST
11061B	11061-3768	GASKET,MUFFLER
130	130CD08120	BOLT-FLANGED,8X120
130A	130CD08140	BOLT-FLANGED,8X140
130B	130CD0895	BOLT-FLANGED,8X95
130C	130CD10100	BOLT-FLANGED,10X100
130D	130CD10150	BOLT-FLANGED,10X150
16104	16104-0567	FILTER-COMP,MUFFLER
18088	18088-3730	PIPE-EXHAUST
18180	18180-3751	BODY-MUFFLER
411	411S0800	WASHER-PLAIN,8MM
411A	411S1000	WASHER-PLAIN,10MM
49070	49070-3757	MUFFLER-COMP
551	551R0412	PIN-DOWEL
59081	59081-3744	MANIFOLD-EXHAUST
92005	92005-0728	FITTING
92015	92015-1371	NUT,CAP,8MM
92062	92062-0562	NOZZLE
92154	92154-0211	BOLT,SOCKET,5X10
92170	92170-3764	CLAMP
92171	92171-3715	CLAMP
92191	92191-3986	TUBE,PIPE EX-MUFFLER
92192	92192-3761	TUBE,1ST-2ND

KAWASAKI

2011

ULTRA 300X(JT1500HBF)

OIL PAN

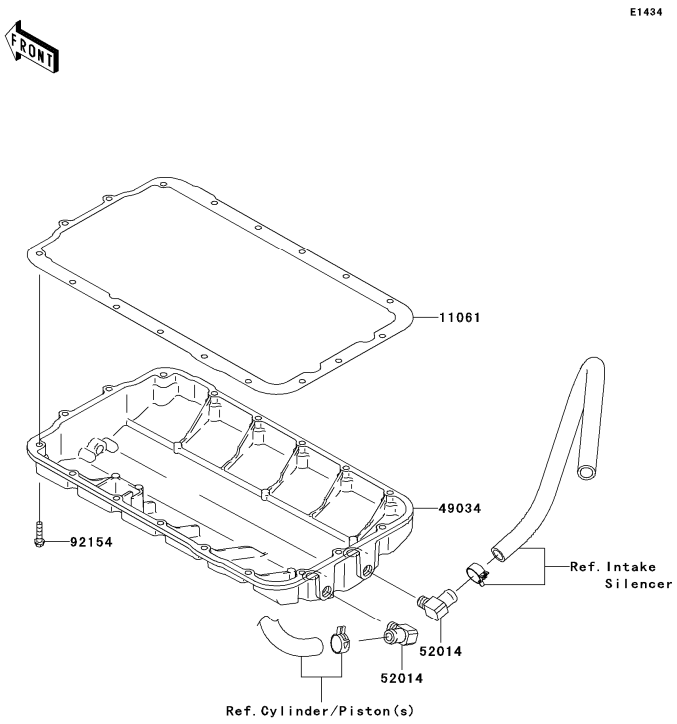

11061	11061-3710	GASKET,OIL PAN
49034	49034-3702	PAN-OIL
52014	52014-3717	ELBOW
92154	92154-0823	BOLT,FLANGED,6X25

©2016 Kawasaki Motors Corp., U.S.A.

KAWASAKI

2011

ULTRA 300X(JT1500HBF)

OIL PUMP

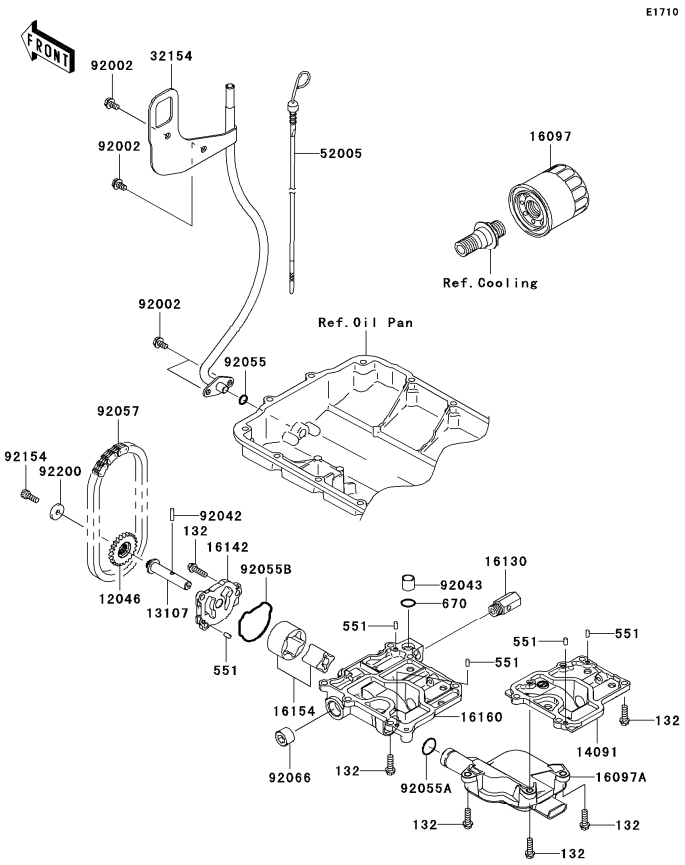

©2016 Kawasaki Motors Corp., U.S.A.

12046	12046-3708	SPROCKET,23T
13107	13107-0730	SHAFT
132	132BD0620	BOLT-FLANGED-SMALL,6X20
14091	14091-3767	COVER
16097	16097-0003	FILTER-ASSY-OIL
16097A	16097-3702	FILTER-ASSY-OIL
16130	16130-3701	VALVE-ASSY-RELIEF
16142	16142-3703	COVER-PUMP
16154	16154-1124	ROTOR-PUMP
16160	16160-0705	BODY,OIL PUMP
32154	32154-3721	PIPE,OIL LEVEL
52005	52005-0716	GAUGE,OIL LEVEL
551	551R0408	PIN-DOWEL
670	670D2014	O RING,14MM
92002	92002-3763	BOLT,6X12
92042	92042-014	PIN,DOWEL,4X15.8
92043	92043-1279	PIN,11.5X14X14
92055	92055-1150	RING-O,9.8X2.4
92055A	92055-1332	RING-O,19.8X1.9
92055B	92055-3764	RING-O
92057	92057-3713	CHAIN,OIL PUMP,98XRH2010-52L
92066	92066-0002	PLUG,PT1/2X12.5
92154	92154-3709	BOLT,SOCKET,6X16
92200	92200-0120	WASHER,6X20X3.2

KAWASAKI

2011

ULTRA 300X(JT1500HBF)

OWNER'S TOOLS

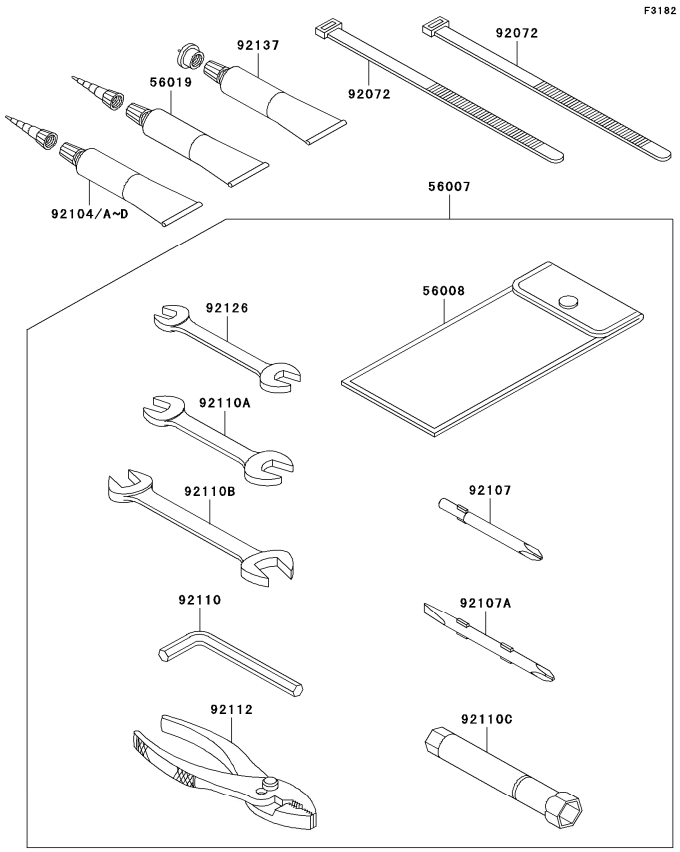

56007	56007-3720	TOOL-KIT
56008	56008-3706	BAG,TOOL
56019	56019-120	GASKET-LIQUID,TB1211,WHITE
92072	92072-1237	BAND,L=250
92104	92104-0004	GASKET-LIQUID,TB1211F,CLEAR
92104A	92104-1063	GASKET-LIQUID,TB1216,GRAY
92104B	92104-1064	GASKET-LIQUID,TB1216B,BLACK
92104C	92104-1065	GASKET-LIQUID,TB1215,GRAY
92104D	92104-3701	GASKET-LIQUID,TB1521,BROWN
92107	92107-005	TOOL-DRIVER,#3PHILLIPS
92107A	92107-1051	TOOL-DRIVER,#2PHILLIPS&SLOT
92110	92110-1015	TOOL-WRENCH,ALLEN,5MM
92110A	92110-1152	TOOL-WRENCH,OPEN END,10X12
92110B	92110-1153	TOOL-WRENCH,OPEN END,14X17
92110C	92110-3706	TOOL-WRENCH,BOX,16MM
92112	92112-1001	TOOL-PLIERS
92126	92126-004	TOOL-WRENCH,OPEN END,8X10
92137	92137-1002	GREASE

©2016 Kawasaki Motors Corp., U.S.A.

KAWASAKI

2011

ULTRA 300X(JT1500HBF)

PADS

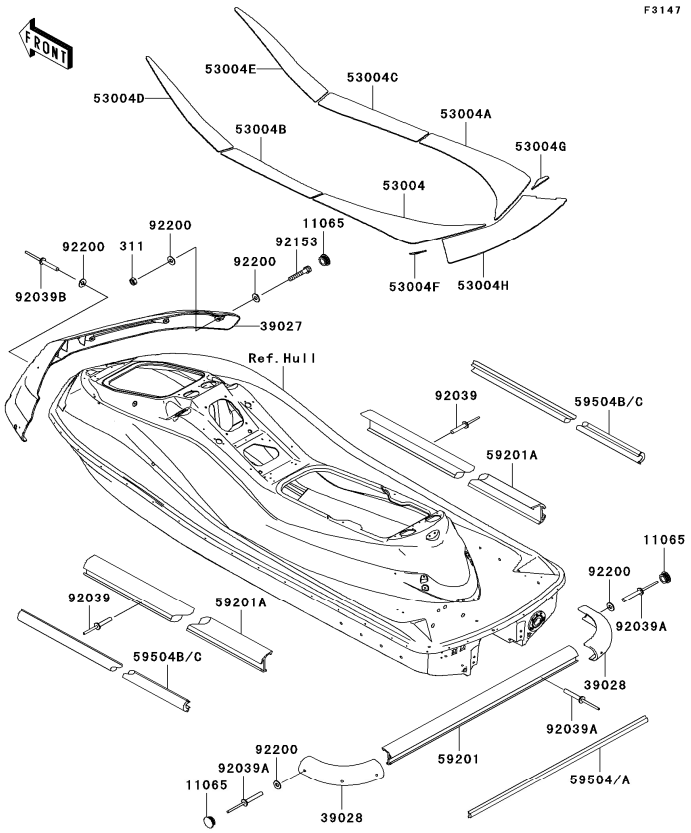

©2016 Kawasaki Motors Corp., U.S.A.

11065	11065-3707-6Z	CAP,F.BLACK
311	311R0500	NUT-HEX,5MM
39027	39027-3747-6Z	BUMPER-FRONT,F.BLACK
39028	39028-3752-6Z	BUMPER-REAR,CORNER,F.BLACK
53004	53004-3909	MAT,FLOOR,MIDDLE,LH
53004A	53004-3910	MAT,FLOOR,MIDDLE,RH
53004B	53004-3911	MAT,FLOOR,FR,LH
53004C	53004-3912	MAT,FLOOR,FR,RH
53004D	53004-3913	MAT,FR,LH
53004E	53004-3914	MAT,FR,RH
53004F	53004-3915	MAT,RR,LH
53004G	53004-3916	MAT,RR,RH
53004H	53004-3936	MAT,FLOOR,RR
59201	59201-3788-6Z	BUMPER,RR,F.BLACK
59201A	59201-3791-6Z	BUMPER,SIDE,F.BLACK
59504	59504-3732-AG	INSERT-BOAT FENDER,RR,F.SILVER
59504B	59504-3733-AG	INSERT-BOAT FENDER,SIDE,SILVER
92039	92039-3771	RIVET
92039A	92039-3773	RIVET
92039B	92039-3794	RIVET
92153	92153-3742	BOLT,SOCKET,5X30
92200	92200-3796	WASHER,5X12X1

KAWASAKI

2011

ULTRA 300X(JT1500HBF)

SEAT

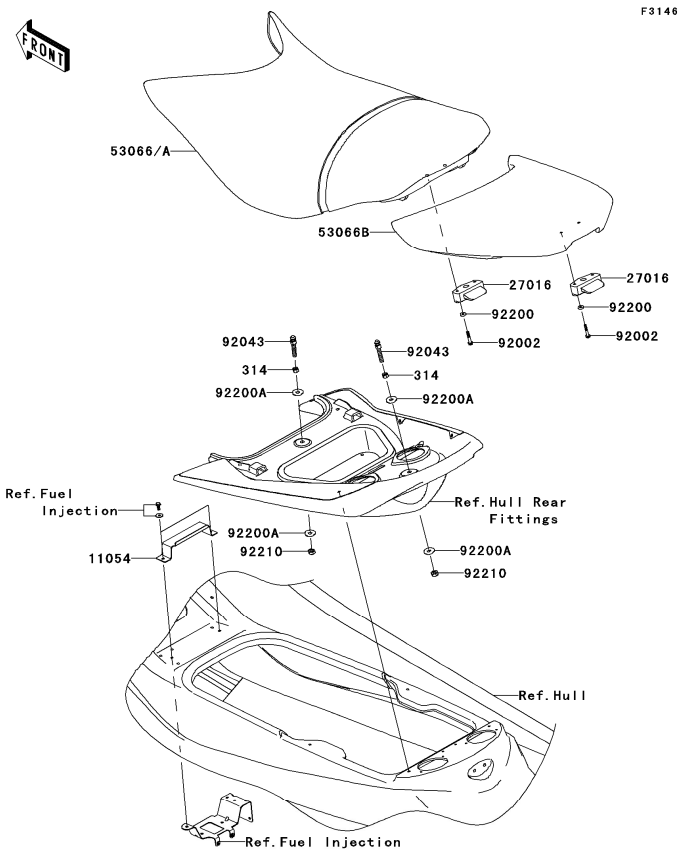

©2016 Kawasaki Motors Corp., U.S.A.

11054	11054-3702	BRACKET,FRONT SEAT
27016	27016-3758	LOCK-ASSY,SEAT,FR&RR
314	314R1000	NUT-HEX-FINE,10MM
53066A	53066-3726-13K	SEAT-ASSY,LEATHER GRN+BAND GRN
53066B	53066-3734-12N	SEAT-ASSY,P.SILVER
92002	92002-3716	BOLT,6X40
92043	92043-3763	PIN
92200	92200-1543	WASHER,6.5X16X2.0
92200A	92200-3762	WASHER
92210	92210-3792	NUT,LOCK,10MM

KAWASAKI

2011

ULTRA 300X(JT1500HBF)

STARTER MOTOR

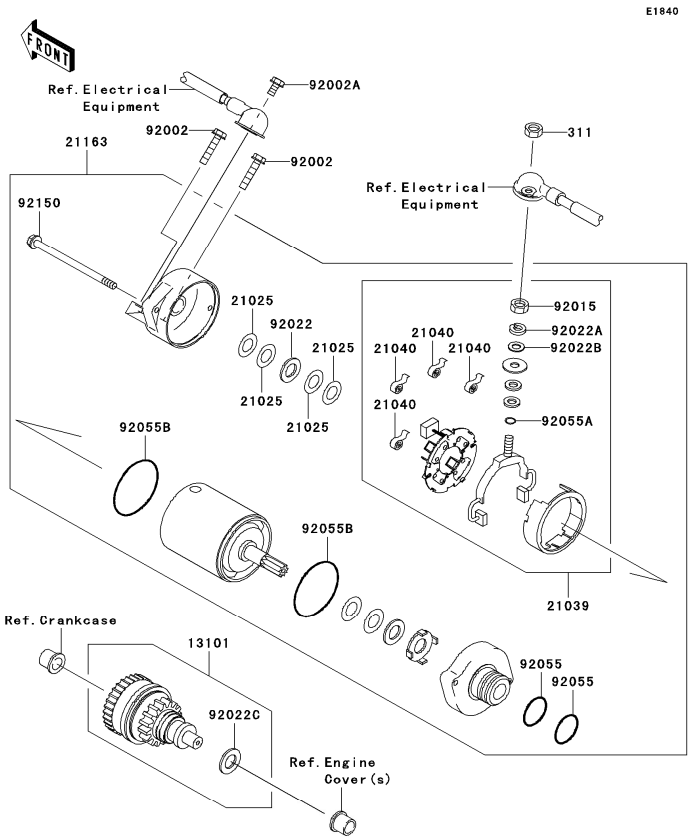

©2016 Kawasaki Motors Corp., U.S.A.

13101	13101-3710	GEAR-ASSY
21025	21025-011	WASHER,9.1X18X0.2
21039	21039-3703	BRUSH,CARBON
21040	21040-1055	SPRING-BRUSH
21163	21163-3721	STARTER-ELECTRIC
311	311R0600	NUT-HEX,6MM
92002	92002-3714	BOLT,6X25
92002A	92002-3763	BOLT,6X12
92015	92015-3710	NUT,6MM
92022	92022-1132	WASHER,9.1X18X0.8
92022A	92022-3711	WASHER,6MM
92022B	92022-3713	WASHER,6MM
92022C	92022-3731	WASHER,12X24X1.0
92055	92055-1276	RING-O
92055A	92055-1370	RING-O,4.5X2.0
92055B	92055-1381	RING-O,STARTER MOTOR
92150	92150-3772	BOLT

KAWASAKI

2011

ULTRA 300X(JT1500HBF)

SUPER CHARGER

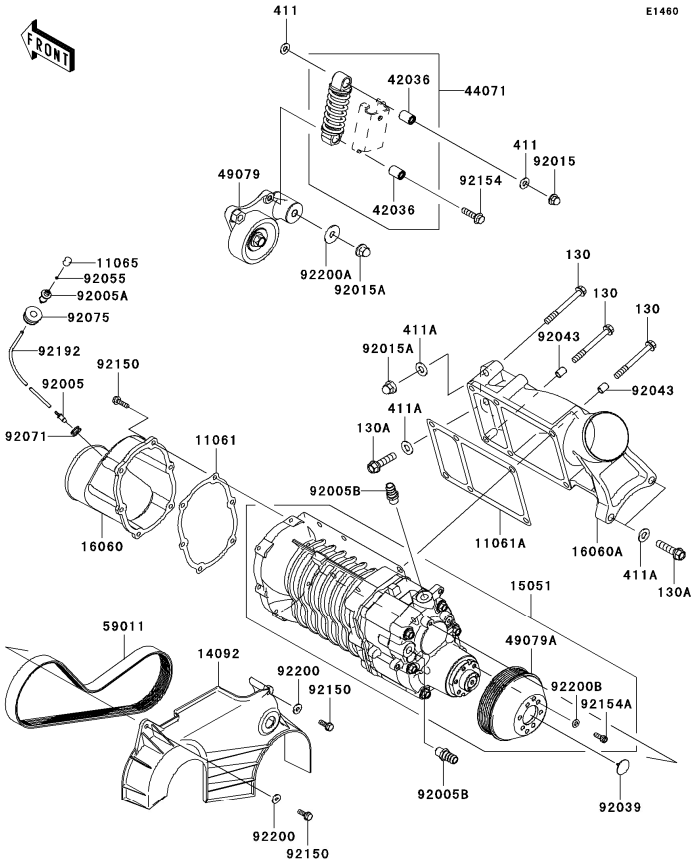

©2016 Kawasaki Motors Corp., U.S.A.

11061	11061-0760	GASKET,COMPRESSOR IN
11061A	11061-3763	GASKET,COMPRESSOR
11065	11065-0156	CAP
130	130CD0875	BOLT-FLANGED,8X75
130A	130CD1040	BOLT-FLANGED,10X40
14092	14092-0838	COVER,BELT
15051	15051-3704	COMPRESSOR-AIR,SUPER CHARGER
16060	16060-0738	PIPE-INTAKE,COMPRESSOR INLET
16060A	16060-3725	PIPE-INTAKE,COMPRESSOR OUT
411	411S0800	WASHER-PLAIN,8MM
411A	411S1000	WASHER-PLAIN,10MM
42036	42036-0713	SLEEVE
44071	44071-0776	DAMPER-ASSY
49079	49079-0703	PULLEY-BELT
49079A	49079-3704	PULLEY-BELT
59011	59011-3702	BELT,6PK845
92005	92005-0722	FITTING
92005A	92005-0723	FITTING
92005B	92005-3714	FITTING
92015	92015-1371	NUT,CAP,8MM
92015A	92015-1649	NUT,10MM
92039	92039-3795	RIVET
92043	92043-3764	PIN,8.2X10.5X14
92055	92055-0718	RING-O,2X1
92071	92071-1152	GROMMET
92075	92075-1424	DAMPER,FUEL TANK
92150	92150-3729	BOLT,6X18
92154	92154-0865	BOLT
92154A	92154-3714	BOLT,SOCKET,6X16
92192	92192-1004	TUBE,3X4X600
92200	92200-1543	WASHER,6.5X16X2.0
92200A	92200-3762	WASHER
92200B	92200-3814	WASHER,6.5X13X1.5

KAWASAKI

2011

ULTRA 300X(JT1500HBF)

THROTTLE

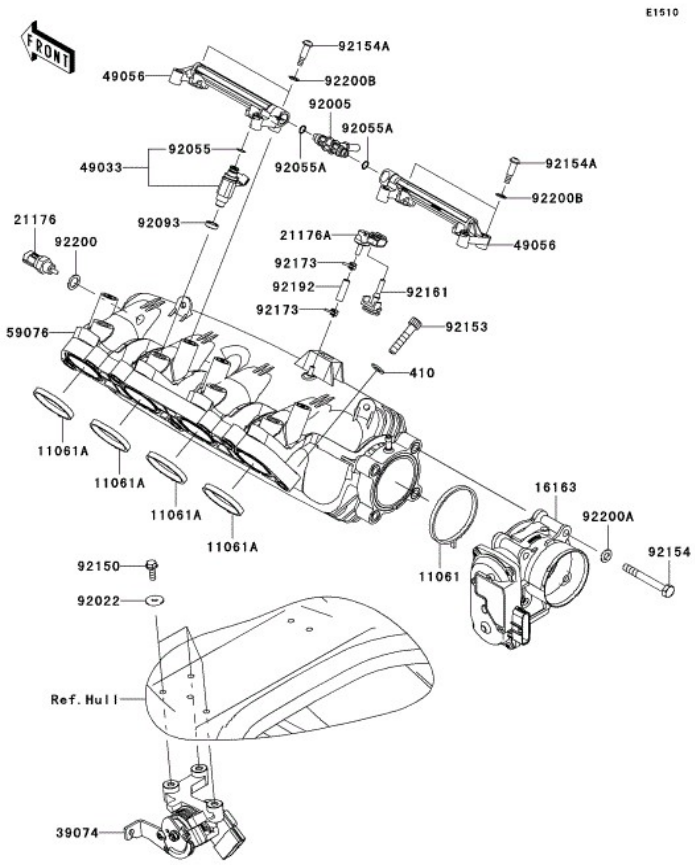

®2016 Kawasaki Motors Corp., U.S.A.

11061	11061-3766	GASKET,MANIFOLD
11061A	11061-3767	GASKET,THROTTLE
16163	16163-3717	THROTTLE-ASSY
21176	21176-1086	SENSOR,AIR TEMPERATURE
21176A	21176-3777	SENSOR,BOOST
39074	39074-3730	LEVER-ASSY-THROTTLE
410	410S0800	WASHER-PLAIN-SMALL,8MM
49033	49033-3709	NOZZLE-INJECTION
49056	49056-3705	PIPE-INJECTION,FUEL
59076	59076-3736	MANIFOLD-INTAKE
92005	92005-3766	FITTING,FUEL PIPE
92022	92022-3710	WASHER,6.5X20X1.5
92055	92055-1622	RING-O,INJECTION NOZZLE
92055A	92055-3782	RING-O
92093	92093-0127	SEAL
92150	92150-3729	BOLT,6X18
92153	92153-0517	BOLT,SOCKET,8X40
92154	92154-3712	BOLT
92154A	92154-3713	BOLT
92161	92161-3796	DAMPER
92173	92173-3702	CLAMP
92192	92192-3857	TUBE
92200	92200-0712	WASHER,12X18X1
92200A	92200-3806	WASHER
92200B	92200-3807	WASHER

KAWASAKI

2011

ULTRA 300X(JT1500HBF)

VALVE(S)

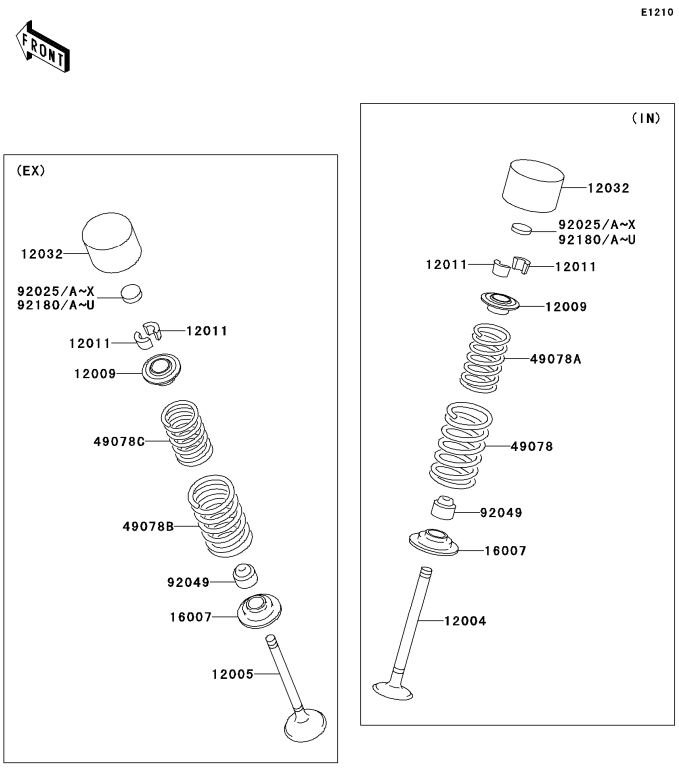

©2016 Kawasaki Motors Corp., U.S.A.

12004	12004-1154	VALVE-INTAKE
12005	12005-0709	VALVE-EXHAUST
12009	12009-3701	RETAINER-VALVE SPRING
12011	12011-1051	COLLET
12032	12032-3701	TAPPET
16007	16007-1163	SEAT-SPRING
49078	49078-1194	SPRING-VALVE,INTAKE,OUTER
49078A	49078-1195	SPRING-VALVE,INTAKE,INNER
49078B	49078-1197	SPRING-VALVE,EXHAUST,OUTER
49078C	49078-1198	SPRING-VALVE,EXHAUST,INNER
92025	92025-1870	SHIM,T=2.00
92025A	92025-1871	SHIM,T=2.05
92025B	92025-1872	SHIM,T=2.10
92025C	92025-1873	SHIM,T=2.15
92025D	92025-1874	SHIM,T=2.20
92025E	92025-1875	SHIM,T=2.25
92025F	92025-1876	SHIM,T=2.30
92025G	92025-1877	SHIM,T=2.35
92025H	92025-1878	SHIM,T=2.40
92025I	92025-1879	SHIM,T=2.45
92025J	92025-1880	SHIM,T=2.50
92025K	92025-1881	SHIM,T=2.55
92025L	92025-1882	SHIM,T=2.60
92025M	92025-1883	SHIM,T=2.65
92025N	92025-1884	SHIM,T=2.70
92025O	92025-1885	SHIM,T=2.75
92025P	92025-1886	SHIM,T=2.80
92025Q	92025-1887	SHIM,T=2.85
92025R	92025-1888	SHIM,T=2.90
92025S	92025-1889	SHIM,T=2.95
92025T	92025-1890	SHIM,T=3.00
92025U	92025-1982	SHIM,T=2.425
92025V	92025-1983	SHIM,T=2.475
92025W	92025-1984	SHIM,T=2.525
92025X	92025-1985	SHIM,T=2.575
92049	92049-1509	SEAL-OIL,RVCI 5X8.7X8
92180	92180-0209	SHIM,T=2.025
92180A	92180-0210	SHIM,T=2.075
92180B	92180-0211	SHIM,T=2.125
92180C	92180-0212	SHIM,T=2.175
92180D	92180-0213	SHIM,T=2.225
92180E	92180-0214	SHIM,T=2.275
92180F	92180-0215	SHIM,T=2.325
92180G	92180-0221	SHIM,T=1.775
92180H	92180-0222	SHIM,T=1.825
92180I	92180-0223	SHIM,T=1.875
92180J	92180-0224	SHIM,T=1.925
92180K	92180-0225	SHIM,T=1.975
92180L	92180-1058	SHIM,T=2.375
92180M	92180-1059	SHIM,T=2.625
92180N	92180-1194	SHIM,T=2.675
92180O	92180-1195	SHIM,T=2.725
92180P	92180-1196	SHIM,T=2.775
92180Q	92180-1208	SHIM,T=1.95
92180R	92180-1209	SHIM,T=1.90
92180S	92180-1210	SHIM,T=1.85
92180T	92180-1211	SHIM,T=1.80
92180U	92180-1212	SHIM,T=1.75