YAMAHA

2009

WAVERUNNER VX CRUISERVX1100BH WAVERUNNER - VX1100BH

CONTROL CABLE

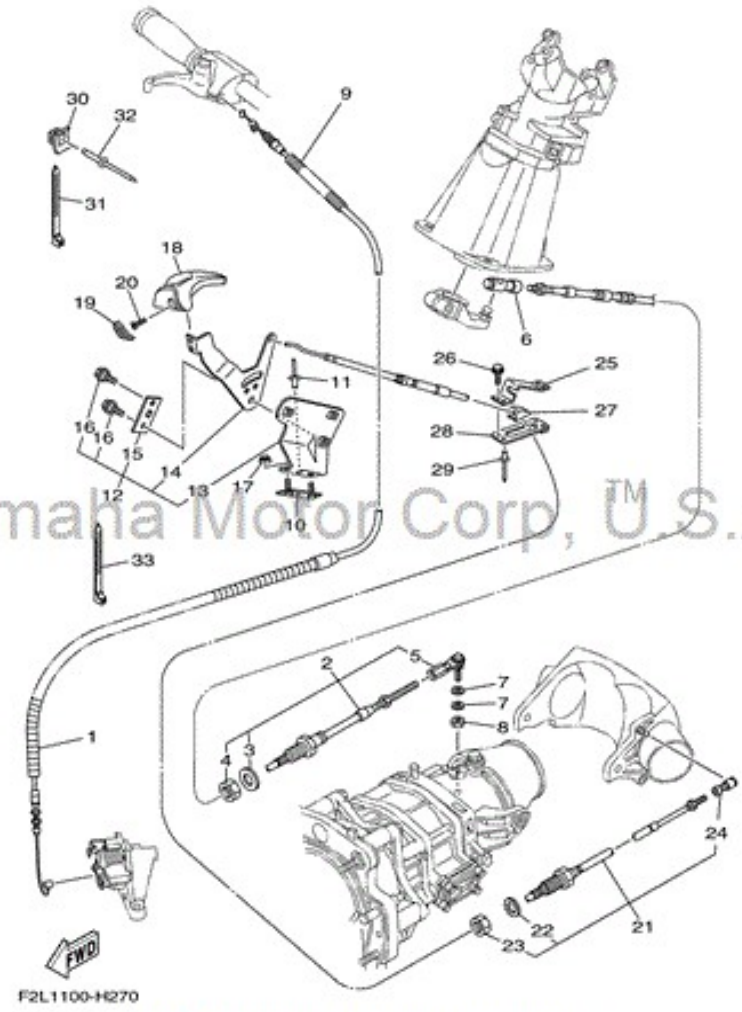

(c) 2005-2016 Yamaha Motor Corporation, U.S.A.

©2014 Yamaha Motor Corporation, U.S.A. All rights reserved.

1	6D3-26311-02-00	CABLE, THROTTLE 1
2	F1K-61481-01-00	CABLE, STEERING
3	F1B-61438-00-00	PACKING C
4	F1B-6151S-00-00	NUT
5	F1B-61461-02-00	STUD, JOINT BALL
6	GK5-U146F-00-00	SHAFT,JOINT BALL
7	90201-06906-00	WASHER, PLATE
8	9538R-06700-00	NUT
9	90447-06803-00	TUBE
10	F1K-U826C-02-00	BRACKET
11	90267-489U6-00	RIVET, BLIND
12	F1K-U134A-00-00	REMOCON. LEVER ASSY.
13	F1K-U1794-02-00	BRACKET
14	F1K-U151N-02-00	LEVER
15	F1K-U152N-00-00	DETENT PLATE
16	F1K-U1355-00-00	BOLT
17	9572R-08300-00	NUT, FLANGE
18	F1K-U2714-02-00	GRIP
19	F1K-U1336-00-00	DAMPER, STOPPER
20	90151-05802-00	SCREW, COUNTERSUNK
21	F1K-6149C-00-00	CABLE,REVERSE
22	F1B-61438-00-00	PACKING C
23	F1B-6151S-00-00	NUT
24	F1B-61460-00-00	BALL JOINT ASSY
25	F1K-U1467-11-00	BRACKET, STOPPER CABLE
26	90119-06878-00	BOLT, WITH WASHER
27	F1K-U146G-01-00	PACKING, CABLE
28	F1K-U1316-02-00	PLATE, STOPPER
29	90267-489U6-00	RIVET, BLIND
30	90600-91736-00	CLAMP COMP.
31	90464-32801-00	CLAMP
32	90267-489U6-00	RIVET, BLIND
33	90464-40825-00	CLAMP

YAMAHA

2009

WAVERUNNER VX CRUISERVX1100BH WAVERUNNER - VX1100BH

CRANKCASE

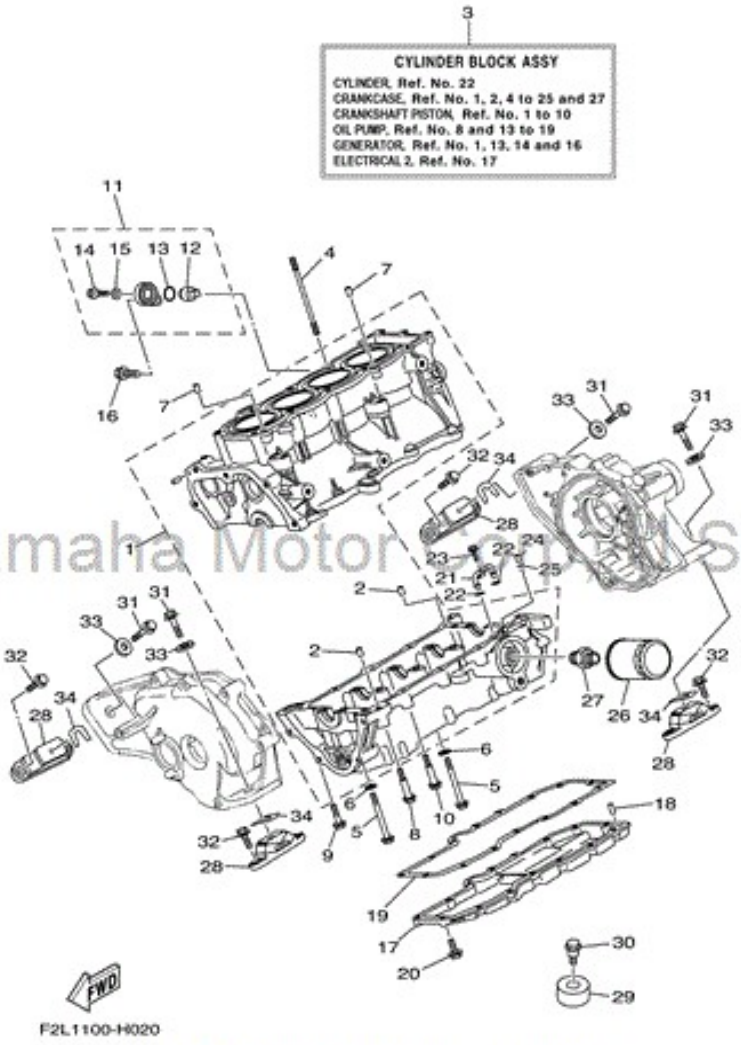

(c) 2005-2016 Yamaha Motor Corporation, U.S.A.

©2014 Yamaha Motor Corporation, U.S.A. All rights reserved.

1	6D3-15100-00-94	CRANKCASE ASSY & STU
2	99530-10014-00	PIN, DOWEL
3	6D3-W009B-10-94	CYLINDER BLOCK ASSY
4	90116-10619-00	BOLT, STUD
5	90105-093A5-00	BOLT, FLANGE
6	90201-096J9-00	WASHER, PLATE
7	99530-10014-00	PIN, DOWEL
8	90109-06051-00	BOLT
9	90105-06033-00	BOLT, FLANGE
10	90105-06M17-00	BOLT, FLANGE
11	69J-11301-00-00	ANODE COVER ASSY
12	67F-11325-01-00	ANODE
13	67F-11328-00-00	GROMMET, ANODE
14	90105-06M07-00	BOLT, FLANGE
15	90430-06M03-00	GASKET
16	97595-08540-00	BOLT, WITH WASHER
17	6B6-1310A-00-94	PAN, OIL
18	93603-14M15-00	PIN, DOWEL
19	6B6-13557-01-00	GASKET
20	97513-06520-00	BOLT, WITH WASHER
21	60E-13161-00-00	PIPE, DELIVERY 1
22	93210-06667-00	O-RING
23	95027-06010-00	BOLT, FLANGE
24	99530-08012-00	PIN, DOWEL
25	93210-08001-00	O-RING
26	5GH-13440-20-00	ELEMENT ASSY, OIL CLEANER
27	90401-20007-00	BOLT, UNION
28	67X-44517-10-94	MOUNT RUBBER
29	6D3-44574-00-00	STOPPER, LOWER MOUNT RUBBER
30	90109-06M92-00	BOLT
31	90119-089UR-00	BOLT,WITH WASHER
32	90119-08823-00	BOLT, WITH WASHER
33	90201-099U3-00	WASHER, PLATE
34	EU0-U7354-00-10	SHIM (T=1.0) | UR
	EU0-U7354-00-05	SHIM (T=0.5) | UR
	EU0-U7354-00-03	SHIM (T=0.3) | UR
	EU0-U7354-00-01	SHIM (T=0.1) | UR
	EU0-U7354-00-20	SHIM (T=2.0) | UR

YAMAHA

2009

WAVERUNNER VX CRUISERVX1100BH WAVERUNNER - VX1100BH

CRANKSHAFT PISTON

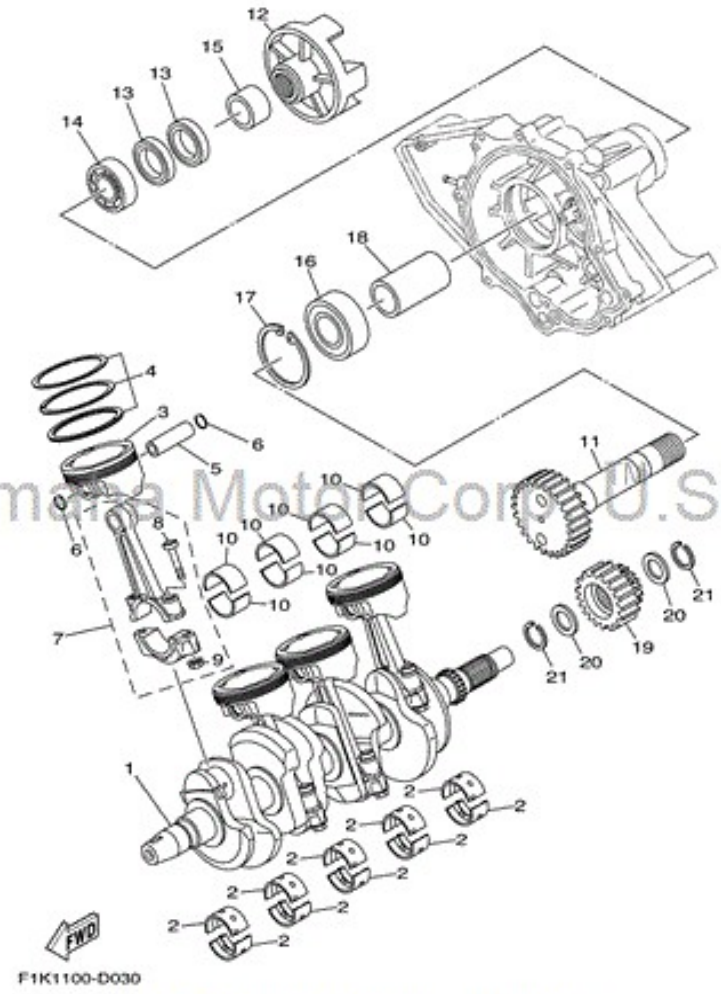

(c) 2005-2016 Yamaha Motor Corporation, U.S.A.

©2014 Yamaha Motor Corporation, U.S.A. All rights reserved.

1	60E-11411-11-00	CRANKSHAFT
2	6D3-11416-00-00	PLANE BEARING, CRANKSHAFT 1 | UR BROWN
	6D3-11416-20-00	PLANE BEARING, CRANKSHAFT 1 | UR BLUE
	6D3-11416-A0-00	PLANE BEARING, CRANKSHAFT 1 | UR RED
	6D3-11416-30-00	PLANE BEARING, CRANKSHAFT 1 | UR GREEN
	6D3-11416-10-00	PLANE BEARING, CRANKSHAFT 1 | UR BLACK
3	6D3-11631-00-B0	PISTON (STD)
4	6D3-11603-00-00	PISTON RING SET (STD)
5	4XV-11633-00-00	PIN, PISTON
6	90468-12069-00	CLIP
7	6D3-11650-00-00	CONNECTING ROD ASSY
8	5JW-11654-00-00	BOLT, CONNECTING ROD
9	90179-08327-00	NUT
10	60E-11656-30-00	PLANE BEARING, CONNECTING ROD | UR GREEN
	60E-11656-20-00	PLANE BEARING, CONNECTING ROD | UR BLUE
	60E-11656-10-00	PLANE BEARING, CONNECTING ROD | UR BLACK
	60E-11656-00-00	PLANE BEARING, CONNECTING ROD | UR BROWN
11	6D3-17572-00-00	SHAFT, TRANSFER
12	6D3-45813-00-94	FLANGE, COUPLING
13	93101-35004-00	OIL SEAL
14	93306-07801-00	BEARING
15	6B6-11478-00-00	COLLAR
16	93306-30610-00	BEARING
17	99009-72500-00	CIRCLIP (70R)
18	6B6-17585-00-00	COLLAR, GEAR
19	6B6-17586-00-00	GEAR, TRANSFER DRIVE
20	90209-25008-00	WASHER
21	93440-28062-00	CIRCLIP

YAMAHA

2009

WAVERUNNER VX CRUISERVX1100BH WAVERUNNER - VX1100BH

CYLINDER

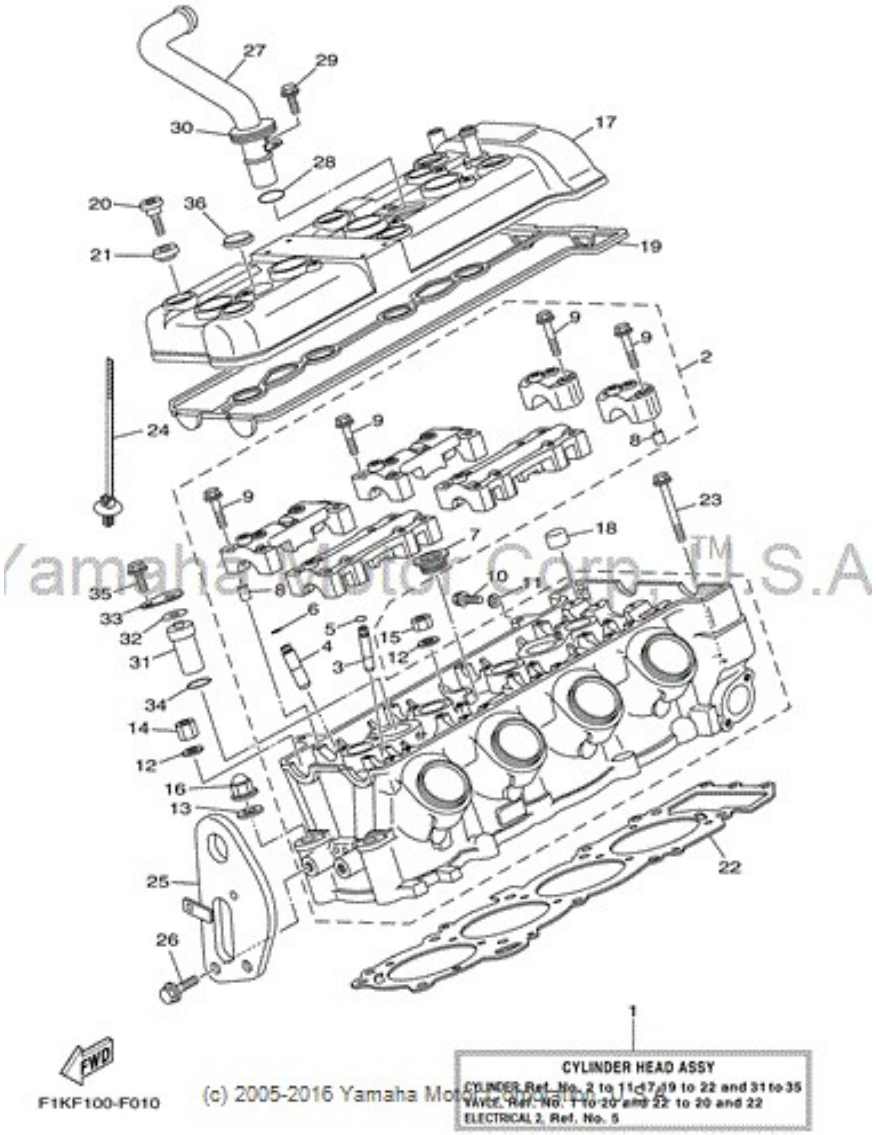

(c) 2005-2016 Yamaha Motor Corp., U.S.A.
Yamaha Motor Corp., U.S.A.
©2014 Yamaha Motor Corporation, U.S.A. All rights reserved.

1	6D3-W009A-10-94	CYLINDER HEAD COMPLETE
2	6D3-11102-00-94	CYLINDER HEAD ASSY
3	3TJ-11133-10-00	GUIDE, VALVE
4	1WG-11133-11-00	GUIDE, VALVE
5	93440-07149-00	CIRCLIP
6	93440-10153-00	CIRCLIP
7	90340-27001-00	PLUG, STRAIGHT SCREW
8	91808-16023-00	PIN, DOWEL
9	90105-06026-00	BOLT, FLANGE
10	95023-06012-00	BOLT, FLANGE (SMALL HEAD)
11	90430-06014-00	GASKET
12	90201-10013-00	WASHER, PLATE
13	90201-10019-00	WASHER, PLATE
14	90179-10006-00	NUT
15	90179-10414-00	NUT
16	90176-10001-00	NUT, CROWN
17	6D3-11191-01-94	COVER, CYLINDER HEAD 1
18	6D3-1118A-00-00	COVER
19	60E-11193-01-00	GASKET, HEAD COVER 1
20	90109-066F0-00	BOLT
21	4KG-1111G-00-00	RUBBER, MOUNT 1
22	6D3-11181-00-00	GASKET, CYLINDER HEAD 1
23	97513-06555-00	BOLT, WITH WASHER
24	90464-31001-00	CLAMP
25	6D3-85132-00-00	BRACKET, REFLECTOR 1
26	97513-08520-00	BOLT, WITH WASHER
27	6D3-12482-00-00	PIPE 2
28	93210-18417-00	O-RING
29	91317-06016-00	BOLT
30	60E-12494-00-00	SEAL, PIPE 1
31	60E-12483-10-00	PIPE 3
32	60E-12474-00-00	GASKET 1
33	60E-12537-00-00	PLATE 2
34	93210-18417-00	O-RING
35	91317-06016-00	BOLT
36	60E-12495-00-00	SEAL, PIPE 2

YAMAHA

2009

WAVERUNNER VX CRUISERVX1100BH WAVERUNNER - VX1100BH

ELECTRICAL 1

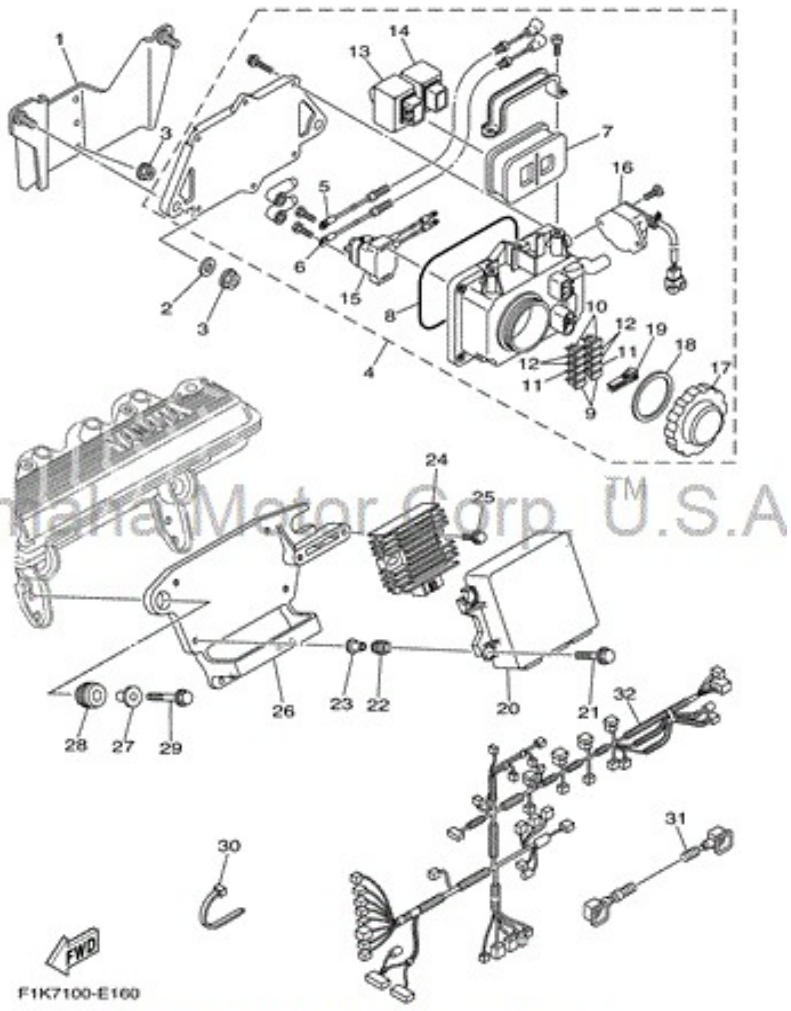

(c) 2005-2016 Yamaha Motor Corporation, U.S.A.

©2014 Yamaha Motor Corporation, U.S.A. All rights reserved.

1	F1K-U815D-00-00	BRACKET, ELECTRIC BOX
2	90201-099U3-00	WASHER, PLATE
3	9572R-08300-00	NUT, FLANGE
4	6D3-82170-00-00	FUSE BOX ASSY
5	6D3-82115-00-00	WIRE, PLUS LEAD
6	6D3-82117-00-00	WIRE, LEAD
7	6D3-82157-00-00	DAMPER
8	6D3-81921-00-00	GASKET, TERMINAL
9	67F-82151-00-00	FUSE (20A-BL)
10	67F-82151-10-00	FUSE (30A-BL)
11	67F-82151-30-00	FUSE (3A)
12	67F-82151-40-00	FUSE (10A)
13	60E-81950-00-00	RELAY ASSY
14	68V-81950-00-00	RELAY ASSY
15	6B6-81940-00-00	STARTER RELAY ASSY
16	60E-8259E-00-00	SWITCH ASSY
17	66V-8132W-00-00	CAP
18	66V-81844-00-00	GASKET
19	67F-2812A-00-00	PULLER, FUSE
20	6D3-8591A-C1-00	ENGINE CONTROL UNIT ASSY
21	90119-06M35-00	BOLT,WITH WASHER
22	6A0-82317-00-00	DAMPER, IGNITION COIL
23	90387-06119-00	COLLAR
24	6S8-81960-00-00	RECTIFIER & REGULATOR ASSY
25	90119-06M35-00	BOLT,WITH WASHER
26	6D3-85991-01-00	BRACKET, UNIT
27	90387-08M37-00	COLLAR
28	90480-22M15-00	GROMMET
29	90119-08M22-00	BOLT, WITH WASHER
30	90464-35132-00	CLAMP
31	6D3-82116-00-00	WIRE, MINUS LEAD
32	6D3-8259L-A4-00	WIRE HARNESS ASSY 1

YAMAHA

2009

WAVERUNNER VX CRUISERVX1100BH WAVERUNNER - VX1100BH

ELECTRICAL 2

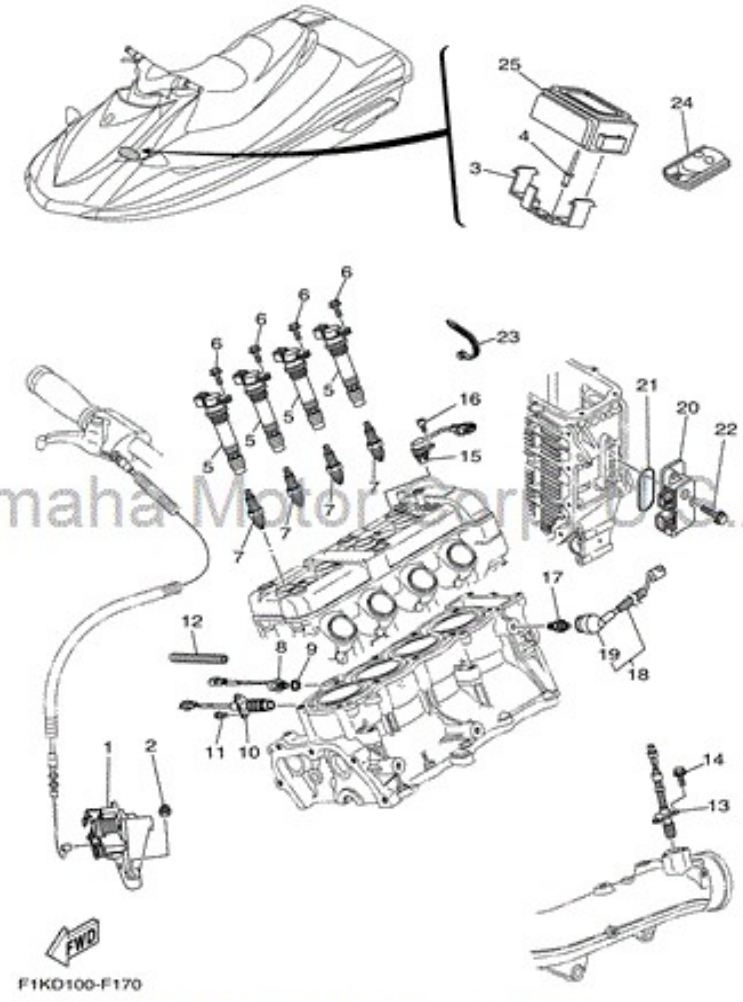

(c) 2005-2016 Yamaha Motor Corporation, U.S.A.

©2014 Yamaha Motor Corporation, U.S.A. All rights reserved.

1	6D3-14305-21-00	ACCEL. POSITON SENSOR ASSY
2	95780-08300-00	NUT, FLANGE
3	F1S-U826C-01-00	BRACKET
4	90267-489U9-00	RIVET, BLIND
5	6D3-82310-00-00	IGNITION COIL ASSY
6	95880-06016-00	BOLT, FLANGE
7	NGK-CR9EB-00-00	PLUG, SPARK (NGK CR9EB)
8	61A-85790-00-00	THERMOSENSOR ASSY
9	92990-10600-00	WASHER, PLATE
10	60E-82560-A1-00	THERMO SWITCH ASSY
11	97595-06416-00	BOLT, WITH WASHER
12	90446-14M23-00	TUBE Not Available
13	6D3-82560-01-00	THERMO SWITCH ASSY
14	97595-06416-00	BOLT, WITH WASHER
15	6D3-85896-00-00	SENSOR, CAM POSITION
16	91380-06016-00	BOLT
17	68V-82504-00-00	OIL PRESSURE SWITCH ASSY
18	60E-81315-00-00	LEAD WIRE ASSY
19	60E-82532-00-00	CAP
20	6D3-8273J-01-00	EARTH PLATE COMP.
21	93210-60ME8-00	O-RING
22	90119-06048-00	BOLT, WITH WASHER
23	90465-13M18-00	CLAMP
24	6B6-86261-00-00	TRANSMITTER COMP
25	6B6-86265-00-00	RECIVER COMP

YAMAHA

2009

WAVERUNNER VX CRUISERVX1100BH WAVERUNNER - VX1100BH

ELECTRICAL 3

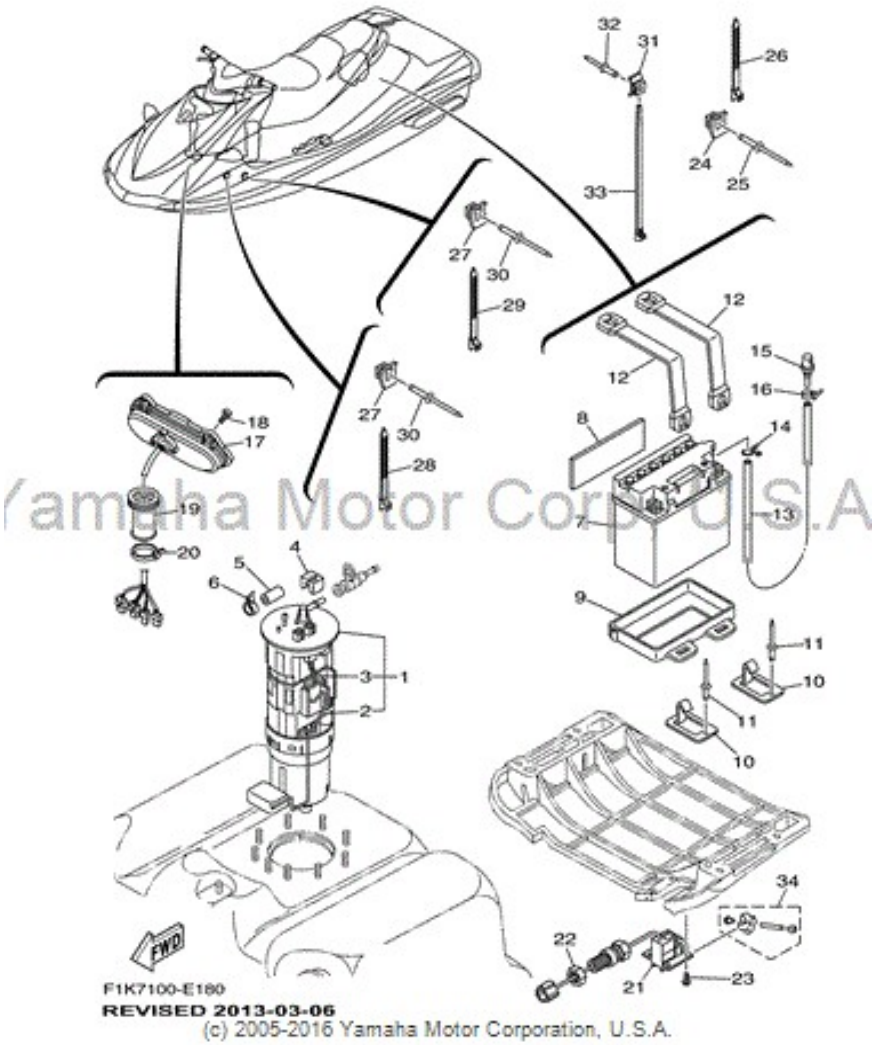

©2014 Yamaha Motor Corporation, U.S.A. All rights reserved.

1	60E-13907-02-00	FUEL PUMP COMP.
2	60E-682E0-00-00	FUEL SENDER ASSY
3	60E-82556-00-00	DAMPER, STOPPER
4	60E-24474-00-00	COVER
5	6D3-24481-00-00	PLUG
6	6D3-24387-00-00	CLIP
7	BTY-YB16C-LB-00	BATTERY ASSY (YB16CL-B) | YUASA
8	F1K-U8221-00-00	PAD, BATTERY
9	F1K-U8211-01-00	CASE, BATTERY
10	F1K-U5772-02-00	HOOK A Not Available
11	90267-489U1-00	RIVET,BLIND
12	F1K-U821D-00-00	BAND, BATTERY 1
13	F0D-U785G-10-00	HOSE, AIR VENT
14	90467-089U1-00	CLIP
15	GJ3-6215F-00-00	NIPPLE
16	90465-11829-00	CLAMP
17	F1K-6820A-01-00	METER ASSY
18	90111-05008-00	BOLT,HEX. SOCKET BUT
19	GU2-6822E-01-00	GROMMET
20	90464-32801-00	CLAMP
21	F1S-U8K31-02-00	SENSOR SPEED
22	EU0-62241-30-00	NUT, DRAIN 1
23	90150-05807-00	SCREW, ROUND HEAD
24	90600-91736-00	CLAMP COMP.
25	90267-48802-00	RIVET, BLIND
26	90464-32801-00	CLAMP
27	90600-91736-00	CLAMP COMP.
28	90464-32801-00	CLAMP
29	90601-200U2-00	BAND
30	90267-489U6-00	RIVET, BLIND
31	90600-91736-00	CLAMP COMP.
32	90267-48802-00	RIVET, BLIND
33	90464-32801-00	CLAMP
34	GJ1-U835D-00-00	REPAIR KIT, SPEED SENSOR

YAMAHA

2009

WAVERUNNER VX CRUISERVX1100BH WAVERUNNER - VX1100BH

ENGINE HATCH 1

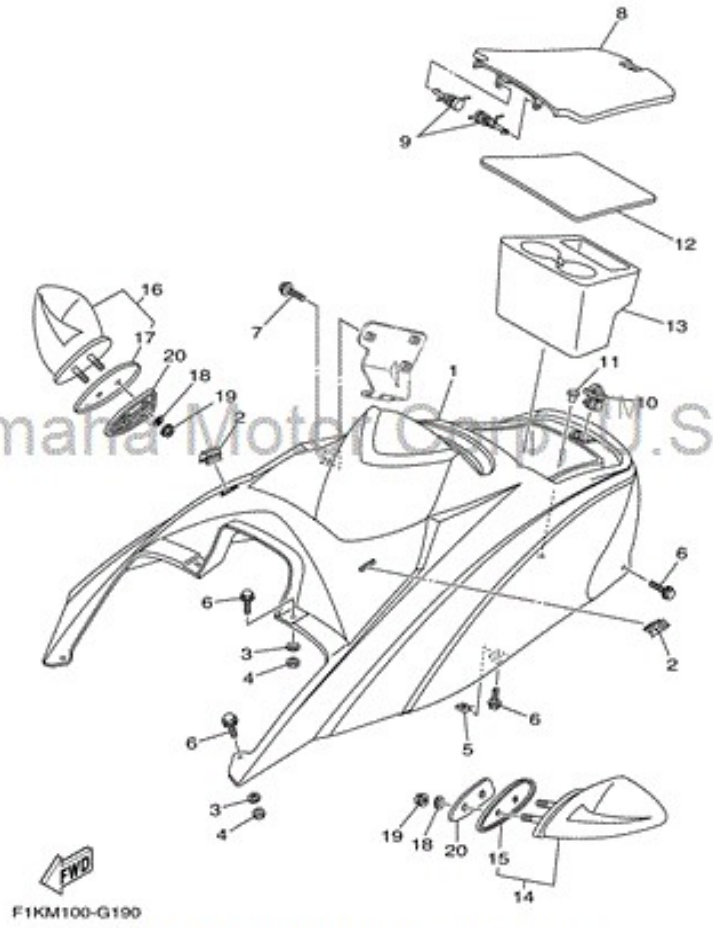

(c) 2005-2016 Yamaha Motor Corporation, U.S.A.

©2014 Yamaha Motor Corporation, U.S.A. All rights reserved.

1	F1K-U516N-11-P0	COVER, ENGINE HATCH | FOR DELUXE BLUE
	F1K-U516N-41-P0	COVER, ENGINE HATCH | BLACK FOR CRUISER/DELUXE
	F1K-U516N-60-P0	COVER, ENGINE HATCH | FOR CRUISER GRAY
2	F1K-U266C-00-00	PACKING 4
3	9299R-06200-00	WASHER
4	9572R-06300-00	NUT, NYLON
5	90183-06902-00	NUT, SPRING
6	90119-06882-00	BOLT, WITH WASHER
7	90119-069US-00	BOLT, WITH WASHER
8	F1K-U517H-01-00	LID HATCH
9	F0X-6517R-01-00	PIN, HINGE
10	GU2-62875-01-00	LOCK
11	90605-502U1-00	PLUG, BLIND
12	F1K-U519D-00-00	PACKING CASE
13	F1K-U5633-02-00	HOLDER, DRINK
14	F1S-U596B-10-00	MIRROR LH
15	F0V-U471E-00-00	SPACER 1
16	F1S-U596C-10-00	MIRROR RH
17	F0V-U471F-00-00	SPACER 2
18	9299R-08200-00	WASHER
19	9572R-08300-00	NUT, FLANGE
20	F1B-U5646-00-00	PLATE

YAMAHA

2009

WAVERUNNER VX CRUISERVX1100BH WAVERUNNER - VX1100BH

ENGINE HATCH 2

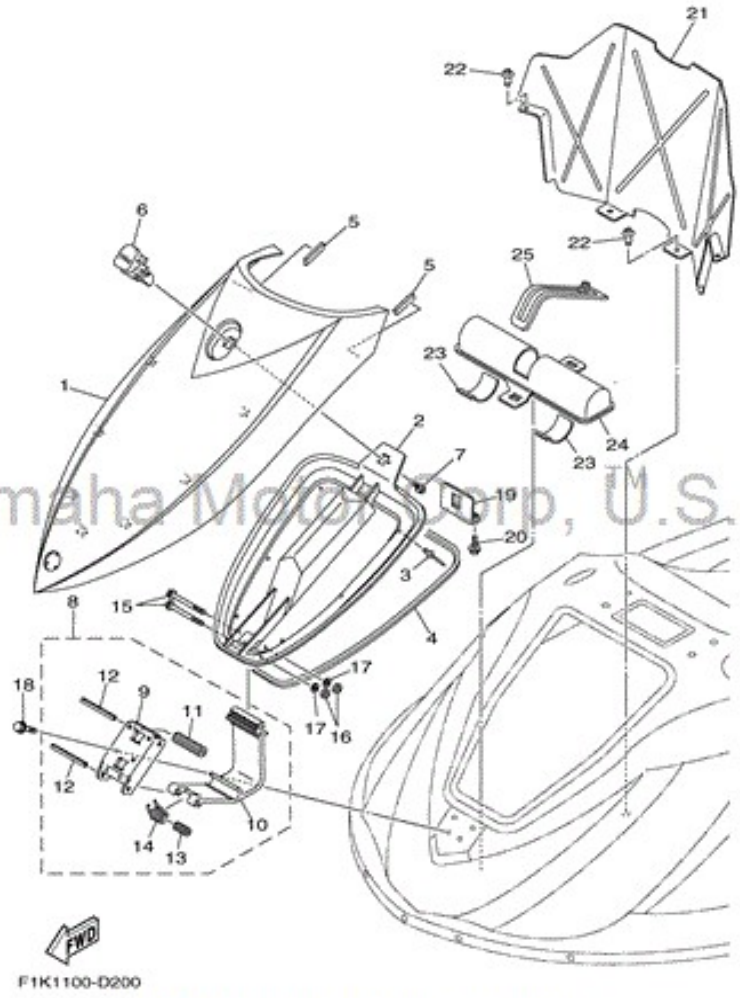

(c) 2005-2016 Yamaha Motor Corporation, U.S.A.

©2014 Yamaha Motor Corporation, U.S.A. All rights reserved.

1	F1K-U517B-10-P0	LID, ENGINE ROOM | FOR DELUXE BLUE
	F1K-U517B-40-P0	LID, ENGINE ROOM | BLACK FOR CRUISER/DELUXE
	F1K-U517B-60-P0	LID, ENGINE ROOM | FOR CRUISER GRAY
2	F1K-U2103-00-00	VENTILATOR COVER COMP, 2
3	90267-48809-00	RIVET, BLIND
4	F1K-U2663-00-00	PACKING 1
5	F1K-U266B-00-00	PACKING 3
6	F1K-6517C-00-00	LOCK, LID
7	90159-059U2-00	SCREW, WITH WASHER
8	F1K-U515A-00-00	HINGE ASSY.
9	F1K-U518E-04-00	PLATE, HINGE LID
10	F1K-U517D-05-00	HINGE, LID
11	F1K-U135C-00-00	ROLLER, DETENT
12	F1K-U517R-00-00	PIN, HINGE
13	F1K-U471E-03-00	SPACER 1
14	F1K-U283B-02-00	SPRING, TORSION
15	90105-06826-00	BOLT, FLANGE
16	9572R-06300-00	NUT, NYLON
17	9299R-06200-00	WASHER
18	90119-069UH-00	BOLT, WITH WASHER
19	F1K-U517F-01-00	HOOK, LID LOCK
20	90119-069UH-00	BOLT, WITH WASHER
21	F1K-U475F-01-00	PLATE, LOCKER BOW
22	90269-08801-00	RIVET
23	F1K-U759C-00-00	MAT 2
24	F1K-U5983-01-00	BOX, FIRE EXTINGUISHER
25	F1K-U828K-00-00	BAND 1

YAMAHA

2009

WAVERUNNER VX CRUISERVX1100BH WAVERUNNER - VX1100BH

EXHAUST 1

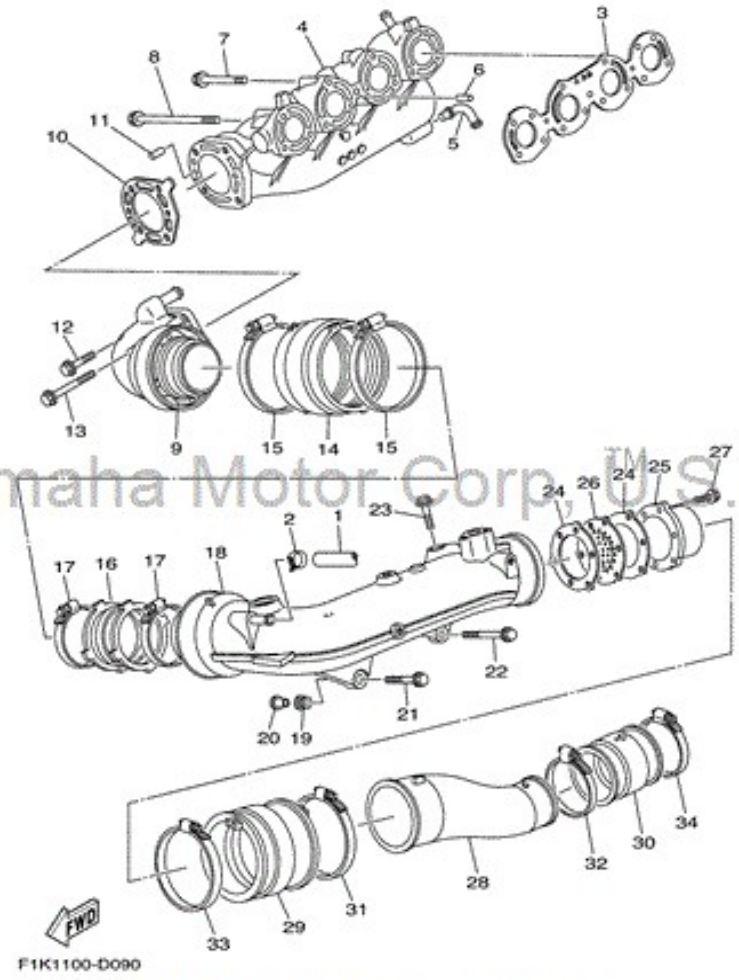

(c) 2005-2016 Yamaha Motor Corporation, U.S.A.

©2014 Yamaha Motor Corporation, U.S.A. All rights reserved.

1	90445-16005-00	HOSE (L870)
2	90467-160A0-00	CLIP
3	6D3-14613-00-00	GASKET, EXHAUST PIPE
4	6D3-14711-00-94	MUFFLER 1
5	60E-11372-10-00	NIPPLE, HOSE
6	93608-16M16-00	PIN, DOWEL
7	90119-08036-00	BOLT, WITH WASHER
8	90119-08075-00	BOLT, WITH WASHER
9	6D3-14712-00-94	RING, JOINT
10	6D3-14739-00-00	GASKET, MUFFLER DAMPER 1
11	93606-12019-00	PIN, DOWEL
12	90119-08036-00	BOLT, WITH WASHER
13	90119-08031-00	BOLT, WITH WASHER
14	6D3-14615-00-00	JOINT, EXHAUST 1
15	90450-99005-00	HOSE CLAMP ASSY
16	6D3-14625-00-00	JOINT, EXHAUST 2
17	90450-90001-00	HOSE CLAMP ASSY
18	6D3-14721-00-94	MUFFLER 2
19	90480-21M63-00	GROMMET
20	90387-11002-00	COLLAR
21	90119-10011-00	BOLT, WITH WASHER
22	90119-10017-00	BOLT, WITH WASHER
23	90119-10013-00	BOLT, WITH WASHER
24	60E-14623-00-00	GASKET, EXHAUST PIPE
25	60E-14784-00-94	PIPE, TAIL
26	6D3-1469W-00-00	PLATE, SILENCER 6
27	90105-06790-00	BOLT, FLANGE
28	6D3-14752-00-94	PIPE, OUTLET
29	6B6-1475E-00-00	PIPE 2
30	6D3-1475F-00-00	PIPE 3
31	90450-99004-00	HOSE CLAMP ASSY
32	90450-94001-00	HOSE CLAMP ASSY
33	90450-99004-00	HOSE CLAMP ASSY
34	90450-94001-00	HOSE CLAMP ASSY

YAMAHA

2009

WAVERUNNER VX CRUISERVX1100BH WAVERUNNER - VX1100BH

EXHAUST 2

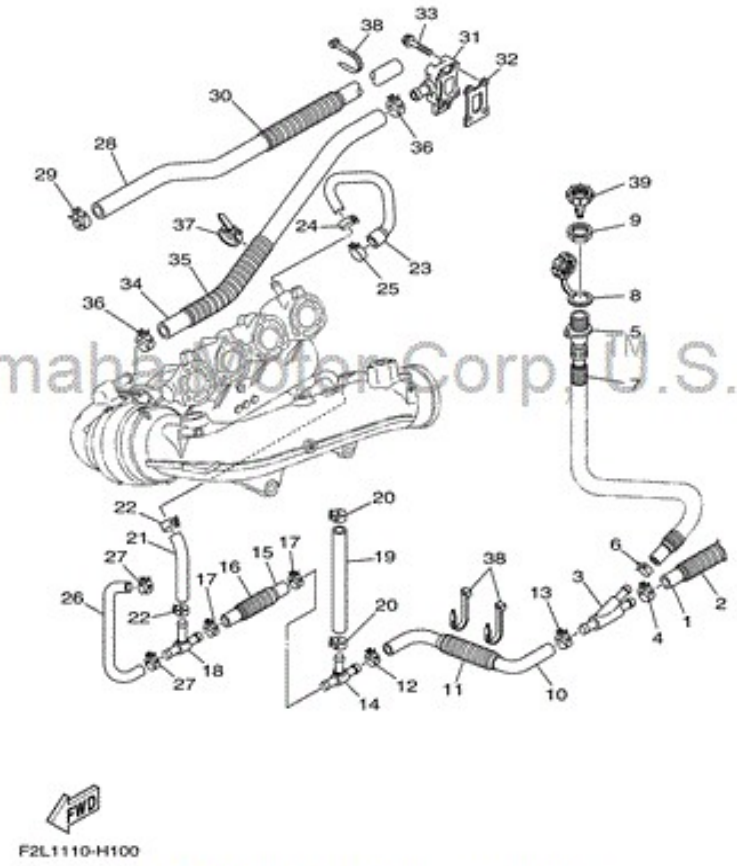

(c) 2005-2016 Yamaha Motor Corporation, U.S.A.

©2014 Yamaha Motor Corporation, U.S.A. All rights reserved.

1	90445-21805-00	HOSE (L300)
2	90447-22004-00	HOSE, WITH SPRING (L200)
3	60E-12581-00-00	JOINT, HOSE 1
4	90467-200A0-00	CLIP
5	63M-12580-00-00	JOINT ASSY
6	90467-150A0-00	CLIP
7	90446-24M79-00	HOSE PROTECTOR
8	682-84385-01-00	CAP,1
9	EU0-61652-00-00	NUT
10	6D3-1243A-10-00	HOSE 1
11	90447-22004-00	HOSE, WITH SPRING (L200)
12	90467-200A0-00	CLIP
13	90467-200A0-00	CLIP
14	60E-12584-00-00	JOINT, HOSE 3
15	6D3-1243E-10-00	HOSE 6
16	90447-22001-00	HOSE, WITH SPRING (L100)
17	90467-200A0-00	CLIP
18	6D3-12584-00-00	JOINT, HOSE 3
19	6D3-1244H-10-00	HOSE 5
20	90467-160A0-00	CLIP
21	90445-18M03-00	HOSE (L108)
22	90467-160A0-00	CLIP
23	6D3-12577-10-00	HOSE 2
24	90467-170A0-00	CLIP
25	90467-200A0-00	CLIP
26	6D3-1244G-10-00	HOSE, 4
27	90467-160A0-00	CLIP
28	90445-22003-00	HOSE (L1010)
29	90467-210A0-00	CLIP
30	90447-22005-00	HOSE, WITH SPRING (L200)
31	6D3-12446-00-00	JOINT
32	60E-12435-00-00	GASKET
33	90105-06035-00	BOLT, FLANGE
34	90445-21004-00	HOSE (L530)
35	90447-22005-00	HOSE, WITH SPRING (L200)
36	90467-200A0-00	CLIP
37	90464-31001-00	CLAMP
38	90464-35132-00	CLAMP
39	67X-E2590-00-00	CONDUCTION ASSY

YAMAHA

2009

WAVERUNNER VX CRUISERVX1100BH WAVERUNNER - VX1100BH

EXHAUST 3

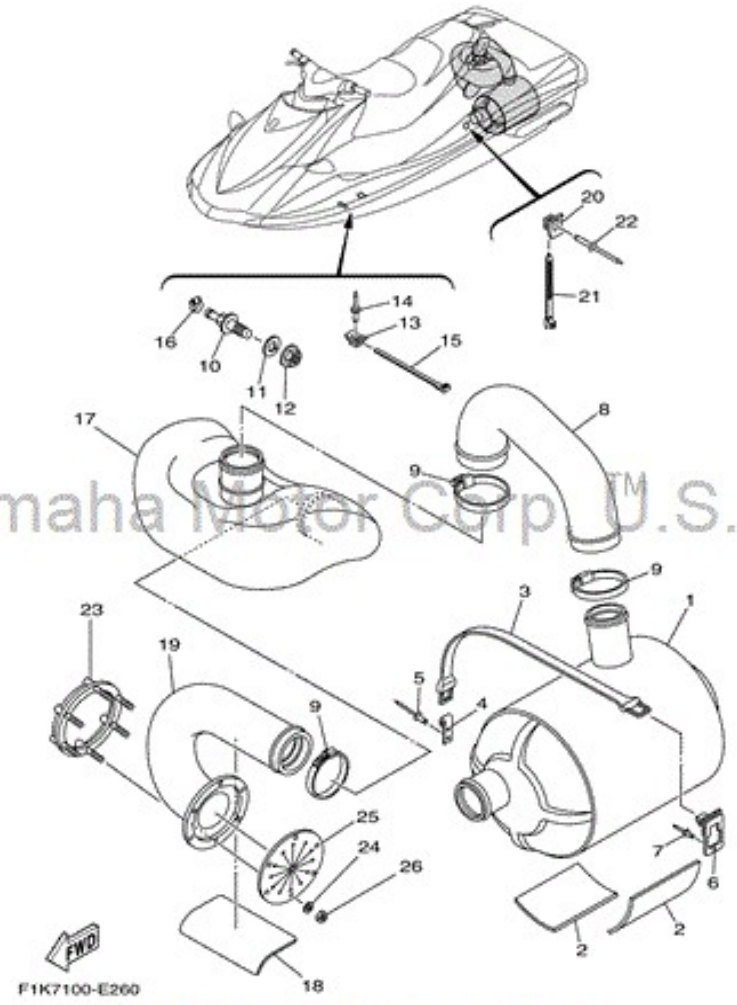

(c) 2005-2016 Yamaha Motor Corporation, U.S.A.

©2014 Yamaha Motor Corporation, U.S.A. All rights reserved.

1	F1K-U7550-01-00	WATER LOCK COMP.
2	F1S-U8221-00-00	PAD, BATTERY
3	EW2-67821-00-00	BAND, FUEL TANK
4	GA7-65772-00-00	HOOK A
5	90267-489U1-00	RIVET,BLIND
6	F1K-U5772-02-00	HOOK A Not Available
7	90267-489U1-00	RIVET,BLIND
8	F1K-U7555-00-00	HOSE, EXHAUST
9	90601-175UR-00	BAND, HOSE 75
10	F1K-6753B-00-00	PILOT, WATER
11	F1B-67564-00-00	GASKET
12	F0X-62733-00-00	NUT
13	90600-91736-00	CLAMP COMP.
14	90267-48802-00	RIVET, BLIND
15	90464-32801-00	CLAMP
16	90601-118UF-00	BAND, HOSE 18
17	F1K-U4261-00-00	TANK, WATER
18	F1S-U8221-00-00	PAD, BATTERY
19	F1K-U758D-00-00	HOSE, EXHAUST 3
20	90600-91736-00	CLAMP COMP.
21	90464-32801-00	CLAMP
22	90267-489U6-00	RIVET, BLIND
23	F1S-U757B-00-00	PLATE
24	9299R-06200-00	WASHER
25	F1B-U751G-00-00	VALVE, EXHAUST
26	9572R-06300-00	NUT, NYLON

YAMAHA

2009

WAVERUNNER VX CRUISERVX1100BH WAVERUNNER - VX1100BH

FUEL TANK

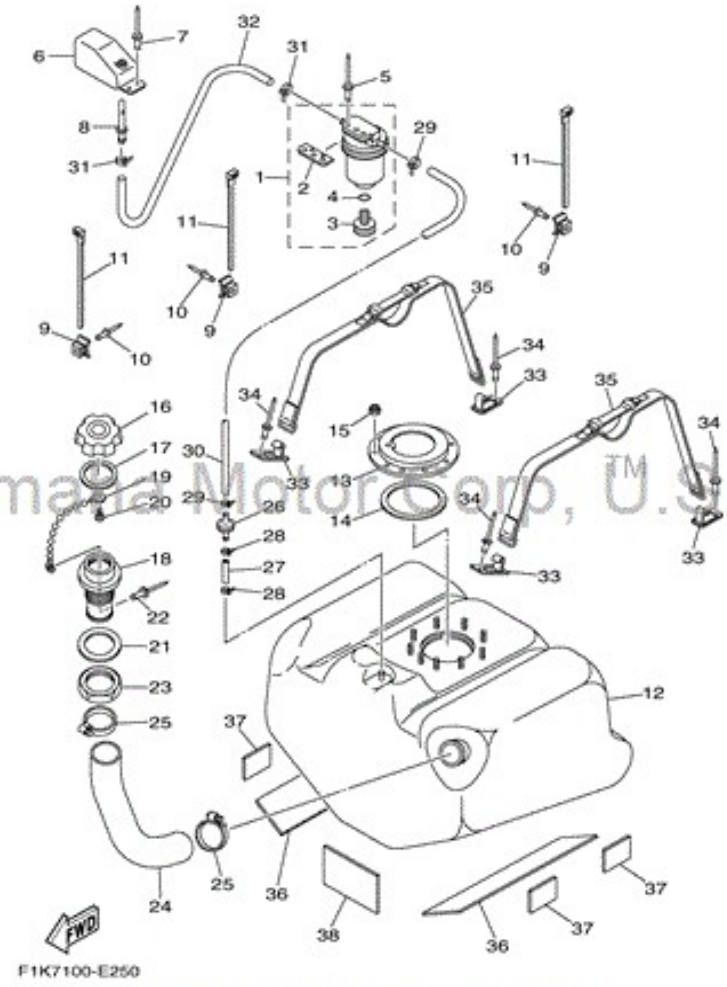

(c) 2005-2016 Yamaha Motor Corporation, U.S.A.

©2014 Yamaha Motor Corporation, U.S.A. All rights reserved.

1	F2F-6214A-00-00	FILTER, VENT ASSY
2	EW2-62142-00-00	PLATE, FILTER
3	70R-24543-00-00	PLUG, DRAIN
4	70R-24489-00-00	O-RING
5	90267-489U2-00	RIVET, BLIND
6	GP7-62159-02-00	SOCKET, VENTILATION
7	90267-489U6-00	RIVET, BLIND
8	F1G-62149-00-00	PIPE, VENTILATION
9	90600-91736-00	CLAMP COMP.
10	90267-48802-00	RIVET, BLIND
11	90464-32801-00	CLAMP
12	F1K-U7711-02-00	TANK, FUEL Not Available
13	F1B-U7773-00-00	RING
14	F1B-67747-00-00	PACKING, SEAL
15	9572R-06300-00	NUT, NYLON
16	GP7-U7831-11-00	CAP, FUEL FILLER | BLACK
17	GP7-U7832-01-00	PACKING
18	GP7-U7833-11-00	SOCKET | BLACK
19	GP7-U7835-00-00	CHAIN BALL
20	90169-049U1-00	TAPPING SCREW
21	GP7-U7834-00-00	PACKING FUEL FILLER
22	90267-329UR-00	RIVET, BLIND
23	GP7-U783F-00-00	NUT, FUEL FILLER
24	F1K-U7844-01-00	HOSE
25	90601-155U4-00	BAND, HOSE 55
26	EU0-67767-31-00	CHECK VALVE
27	GP7-U785H-00-00	HOSE, AIR VENT 3
28	90465-11829-00	CLAMP
29	90465-11829-00	CLAMP
30	F1K-U785G-00-00	HOSE, AIR VENT
31	90465-11829-00	CLAMP
32	F0D-U7856-10-00	HOSE, AIR VENT 3
33	F1K-U5772-02-00	HOOK A Not Available
34	90267-489U1-00	RIVET,BLIND
35	F1K-67743-00-00	BELT, TANK 1
36	F1K-U759B-00-00	MAT 1
37	F1W-U759C-01-00	MAT 2
38	F1S-U8221-00-00	PAD, BATTERY

YAMAHA

2009

WAVERUNNER VX CRUISERVX1100BH WAVERUNNER - VX1100BH

GENERATOR

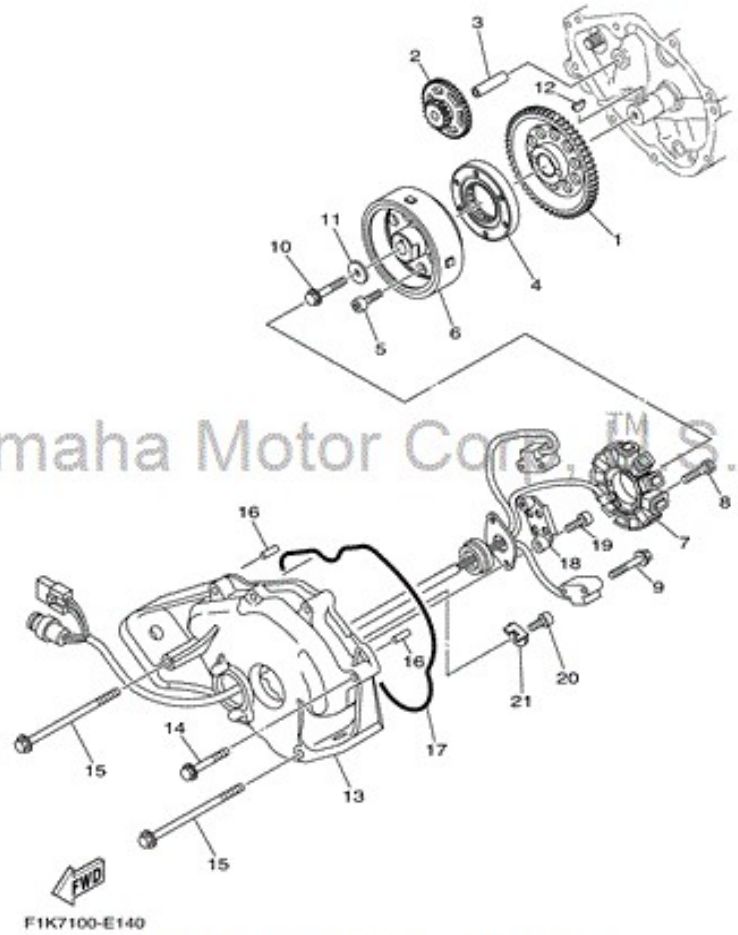

(c) 2005-2016 Yamaha Motor Corporation, U.S.A.

©2014 Yamaha Motor Corporation, U.S.A. All rights reserved.

1	6D3-15515-00-00	GEAR 3
2	60E-15517-00-00	GEAR, IDLER 2
3	60E-15521-00-00	SHAFT 1
4	4WM-15590-00-00	STARTER ONE-WAY ASSY
5	90110-08212-00	BOLT
6	6D3-81450-00-00	ROTOR ASSY
7	6D3-81410-01-00	STATOR ASSY
8	91317-06035-00	BOLT
9	97513-05514-00	BOLT, WITH WASHER
10	90105-105A6-00	BOLT, FLANGE
11	90201-103U7-00	WASHER, PLATE
12	90280-03047-00	KEY, WOODRUFF
13	6D3-81337-00-94	COVER, FLYWHEEL
14	90119-10016-00	BOLT, WITH WASHER
15	90119-10M19-00	BOLT, WITH WASHER
16	93608-16M16-00	PIN, DOWEL
17	93212-04001-00	O-RING
18	60E-81328-00-00	CLAMP
19	91317-06014-00	BOLT
20	91317-05010-00	BOLT
21	6D3-81845-00-00	PLATE

YAMAHA

2009

WAVERUNNER VX CRUISERVX1100BH WAVERUNNER - VX1100BH

GRAPHICS

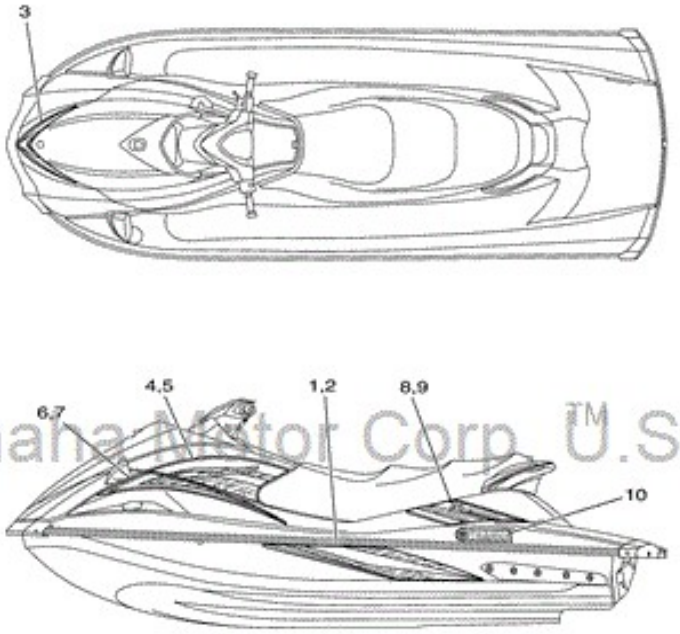

(c) 2005-2016 Yamaha Motor Corporation, U.S.A.

©2014 Yamaha Motor Corporation, U.S.A. All rights reserved.

1	F2L-U417B-30-00	GRAPHIC 1 (LH) | DELUXE BLUE
	F2L-U417B-00-00	GRAPHIC 1 (LH) | CRUISER GRAY
	F2L-U417B-10-00	GRAPHIC 1 (LH) | CRUISER BLACK
	F2L-U417B-20-00	GRAPHIC 1 (LH) | DELUXE BLACK
2	F2L-U417C-00-00	GRAPHIC 2 (RH) | CRUISER GRAY
	F2L-U417C-20-00	GRAPHIC 2 (RH) | DELUXE BLACK
	F2L-U417C-30-00	GRAPHIC 2 (RH) | DELUXE BLUE
	F2L-U417C-10-00	GRAPHIC 2 (RH) | CRUISER BLACK
3	F2L-U417D-00-00	GRAPHIC 3 | CRUISER GRAY Not Available
	F2L-U417D-10-00	GRAPHIC 3 | CRUISER BLACK
	F2L-U417D-30-00	GRAPHIC 3 | DELUXE BLUE Not Available
	F2L-U417D-20-00	GRAPHIC 3 | DELUXE BLACK
4	F2L-U417F-20-00	GRAPHIC 5 (LH) | DELUXE BLACK
	F2L-U417F-30-00	GRAPHIC 5 (LH) | DELUXE BLUE
	F2L-U417F-10-00	GRAPHIC 5 (LH) | CRUISER BLACK
	F2L-U417F-00-00	GRAPHIC 5 (LH) | CRUISER GRAY
5	F2L-U417G-30-00	GRAPHIC 6 (RH) | DELUXE BLUE
	F2L-U417G-20-00	GRAPHIC 6 (RH) | DELUXE BLACK
	F2L-U417G-00-00	GRAPHIC 6 (RH) | CRUISER GRAY
	F2L-U417G-10-00	GRAPHIC 6 (RH) | CRUISER BLACK
6	F2L-U417H-00-00	GRAPHIC 7 (LH) | CRUISER GRAY
	F2L-U417H-20-00	GRAPHIC 7 (LH) | DELUXE BLACK
	F2L-U417H-30-00	GRAPHIC 7 (LH) | DELUXE BLUE
	F2L-U417H-10-00	GRAPHIC 7 (LH) | CRUISER BLACK
7	F2L-U417J-10-00	GRAPHIC 8 (RH) | CRUISER BLACK
	F2L-U417J-20-00	GRAPHIC 8 (RH) | DELUXE BLACK
	F2L-U417J-30-00	GRAPHIC 8 (RH) | DELUXE BLUE
	F2L-U417J-00-00	GRAPHIC 8 (RH) | CRUISER GRAY
8	F2L-U417K-10-00	GRAPHIC 9 (LH) | CRUISER BLACK
	F2L-U417K-20-00	GRAPHIC 9 (LH) | DELUXE BLACK
	F2L-U417K-30-00	GRAPHIC 9 (LH) | DELUXE BLUE
	F2L-U417K-00-00	GRAPHIC 9 (LH) | CRUISER GRAY
9	F2L-U417L-10-00	GRAPHIC B (RH) | CRUISER BLACK
	F2L-U417L-00-00	GRAPHIC B (RH) | CRUISER GRAY
	F2L-U417L-30-00	GRAPHIC B (RH) | DELUXE BLUE
	F2L-U417L-20-00	GRAPHIC B (RH) | DELUXE BLACK
10	F1X-U411C-10-00	EMBLEM, YAMAHA | CRUISER BLACK
	F1S-U411C-10-00	EMBLEM, YAMAHA | DELUXE BLUE
	F1X-U411C-60-00	EMBLEM, YAMAHA | CRUISER GRAY
11	F1B-65986-00-00	TOOL SET
12	EU0-65901-01-00	TOOL BAG

YAMAHA

2009

WAVERUNNER VX CRUISERVX1100BH WAVERUNNER - VX1100BH

GUNWALE MAT

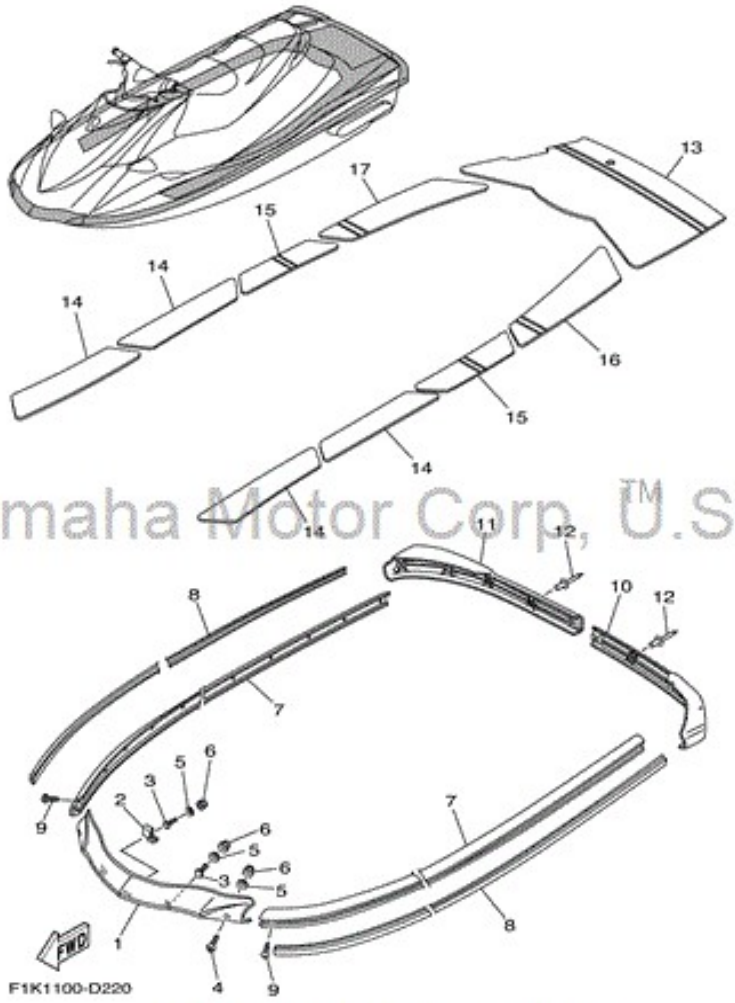

Yamaha Motor Corp, U.S.A ™

(c) 2005-2016 Yamaha Motor Corporation, U.S.A.

©2014 Yamaha Motor Corporation, U.S.A. All rights reserved.

1	F1K-U2501-02-00	BOW GUNWALE COMP. | GRAY
2	F1K-U2521-02-00	PLATE
3	F1W-U491K-00-00	BOLT, SPECIAL
4	90111-06803-00	BOLT,HEX. SOCKET BUTTON
5	9299R-06200-00	WASHER
6	9572R-06300-00	NUT, NYLON
7	F1K-U2512-03-00	GUNWALE, SIDE | GRAY
8	F1K-U2519-02-00	INNER,GUNWALE | FOR DELUXE BLUE
	F1K-U2519-20-00	INNER,GUNWALE | FOR DELUXE BLACK
9	90169-059U1-00	SCREW,TAPPING
10	F1K-U251D-01-00	GUNWALE, STERN 1 | GRAY
11	F1K-U251E-01-00	GUNWALE, STERN 2 | GRAY
12	90267-47801-00	RIVET, BLIND
13	F1K-U3581-10-00	MAT, UPPER | GRAY
14	F1K-U351H-10-00	MAT, STEP 1 | GRAY
15	F1K-U351J-10-00	MAT, STEP 2 | GRAY
16	F1K-U351K-10-00	MAT, STEP 3 | GRAY
17	F1K-U351M-10-00	MAT, STEP 4 | GRAY

YAMAHA

2009

WAVERUNNER VX CRUISERVX1100BH WAVERUNNER - VX1100BH

HULL DECK

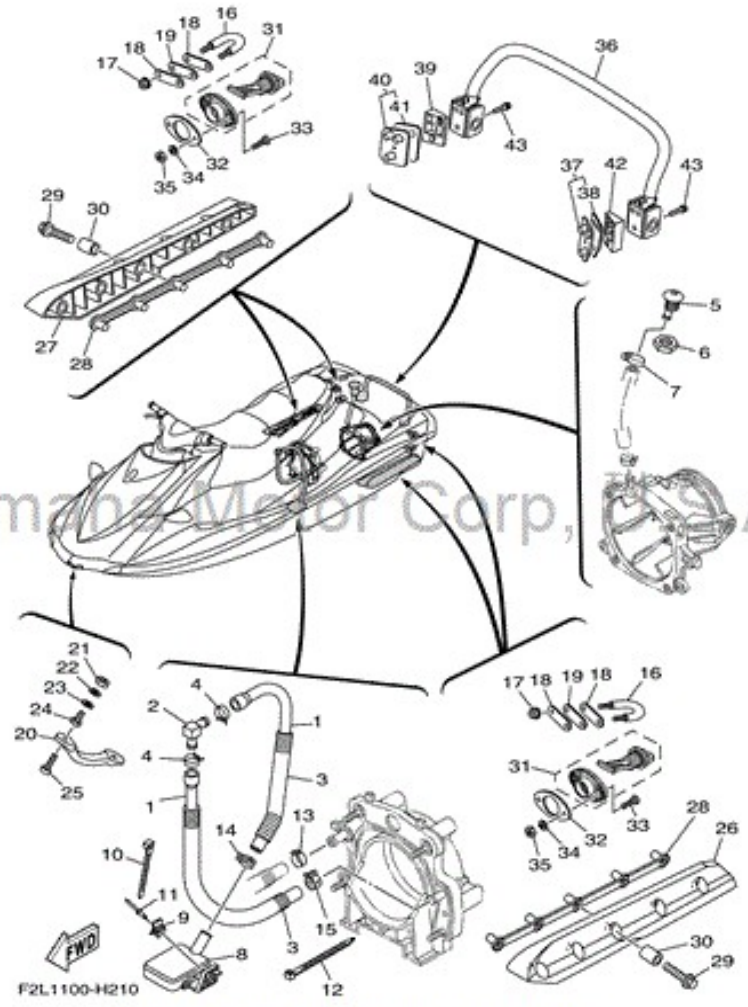

(c) 2005-2016 Yamaha Motor Corporation, U.S.A.

©2014 Yamaha Motor Corporation, U.S.A. All rights reserved.

1	90445-20805-00	HOSE (L710)
2	61X-51162-00-00	JOINT, HOSE
3	90446-27M55-00	TUBE (L400)
4	90467-18804-00	CLIP
5	FN8-6269B-00-00	SPOUT
6	EU0-61652-00-00	NUT
7	90601-118UF-00	BAND, HOSE 18
8	F1B-U761D-02-00	STRAINER, BILGE
9	90600-91736-00	CLAMP COMP.
10	90464-32801-00	CLAMP
11	90267-489U8-00	RIVET, BLIND
12	90601-200U1-00	BAND
13	90467-21800-00	CLIP
14	90467-200A0-00	CLIP
15	90467-210A0-00	CLIP
16	F1K-61628-00-00	STERN EYE
17	9572R-08300-00	NUT, FLANGE
18	GP7-U4953-10-00	PLATE A
19	F1B-U1653-01-00	PACKING
20	F1K-61624-00-00	BOWEYE 1
21	99780-12600-00	NUT.HEX.(COARS)
22	92990-12200-00	WASHER, PLAIN
23	F0X-61637-00-00	WASHER
24	F0X-61652-00-00	NUT (BOLT/NUT)
25	90110-06040-00	BOLT, HEXAGON SOCKET
26	F1S-U883N-01-00	STABILIZER LH | BLACK
27	F1S-U883P-01-00	STABILIZER RH | BLACK
28	F1X-U883T-00-00	BRACKET,STABILIZER
29	90105-08860-00	BOLT,WASHER BASED
30	F1K-U8169-00-00	SPACER
31	F1S-U2280-00-00	DRAIN PLUG ASSY.
32	F1S-U2285-00-00	PACKING, DRAIN
33	9788R-05025-00	SCREW, PAN HEAD
34	9299R-05200-00	WASHER
35	9572R-05300-00	NUT, FLANGE
36	F2L-U278A-00-00	LADDER, STEP ASSY | FOR CRUISER
37	F2L-U278F-00-00	BRACKET, LADDER LH | FOR CRUISER
38	F2L-U278H-00-00	PACKING, BRKT. 1 | FOR CRUISER
39	F2L-U278L-00-00	BRACKET 2 | FOR CRUISER
40	F2L-U278G-00-00	BRACKET, LADDER RH | FOR CRUISER
41	F2L-U278H-00-00	PACKING, BRKT. 1 | FOR CRUISER
42	F2L-U278K-00-00	BRACKET 1 | FOR CRUISER
43	90119-08844-00	BOLT, WITH WASHER | FOR CRUISER

YAMAHA

2009

WAVERUNNER VX CRUISERVX1100BH WAVERUNNER - VX1100BH

IMPORTANT LABELS

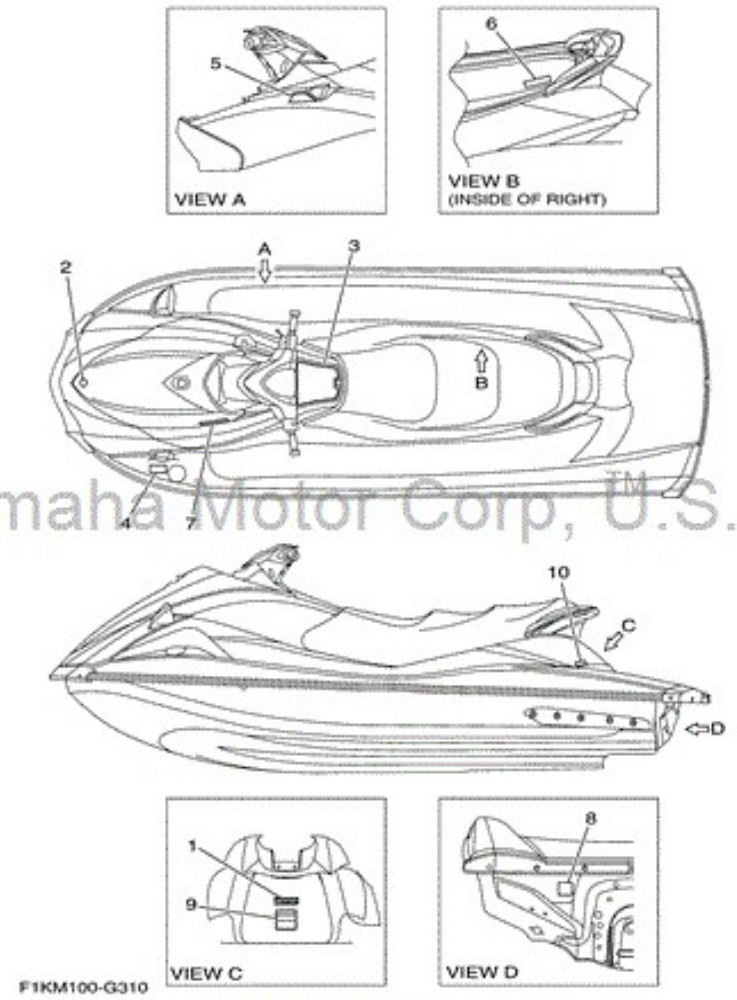

(c) 2005-2016 Yamaha Motor Corporation, U.S.A.

Yamaha Motor Corp, U.S.A

1	F1S-U411C-00-00	EMBLEM, YAMAHA | DELUXE BLUE
	F1X-U411C-20-00	EMBLEM, YAMAHA | CRUISER BLACK
	F1X-U4114-60-00	MARK, YAMAHA A | CRUISER GRAY
2	F1K-U411H-00-00	EMBLEM, TUNING FORK
3	F1K-U41B1-01-00	LABEL, WARNING JDC 1
4	F1S-U415B-01-00	LABEL, WARNING(FUEL)
5	F0V-U41D5-21-00	LABEL, WARNING SHIFT LEVER
6	F0V-U41DB-02-00	LABEL, WARNING BATTERY
7	F0V-U41F5-01-00	LABEL, FIRE EXTINGUISHER 1
8	F1G-U418F-00-00	LABEL, RIGHTING
9	F1S-U41E1-01-00	LABEL, SET 1
10	F1S-U41G1-01-00	LABEL, CAPACITY

©2014 Yamaha Motor Corporation, U.S.A. All rights reserved.

YAMAHA

2009

WAVERUNNER VX CRUISERVX1100BH WAVERUNNER - VX1100BH

INTAKE

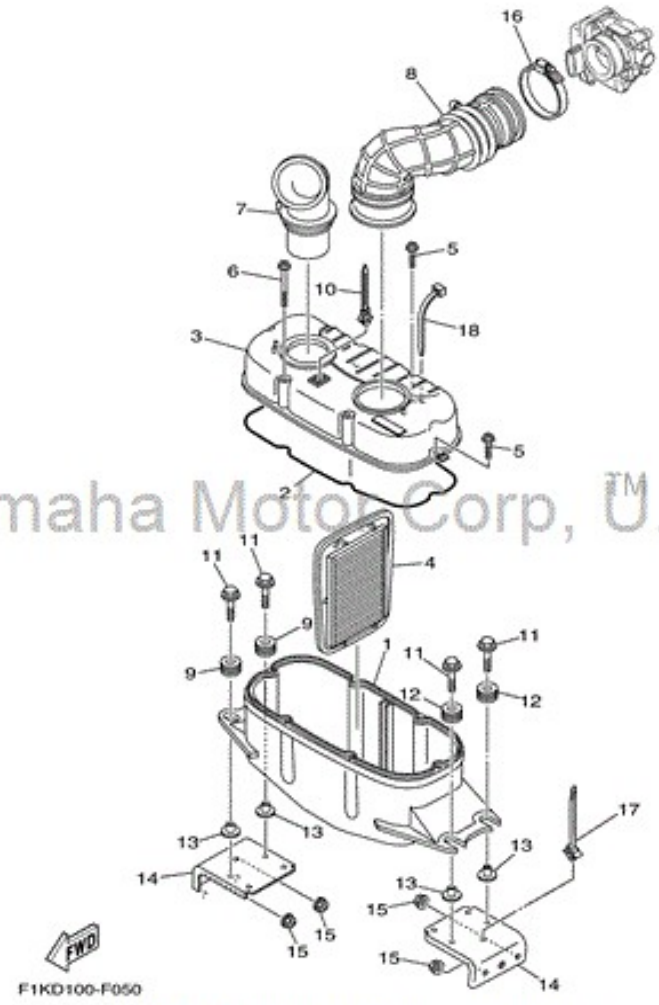

Yamaha Motor Corp, U.S.A
(c) 2005-2016 Yamaha Motor Corporation, U.S.A.
©2014 Yamaha Motor Corporation, U.S.A. All rights reserved.

1	6D3-14411-00-00	CASE, AIR CLEANER 1
2	4XV-14452-00-00	SEAL
3	6D3-14421-02-00	CASE, AIR CLEANER 2
4	6D3-14451-00-00	ELEMENT, AIR CLEANER
5	90159-05013-00	SCREW, WITH WASHER
6	90159-05014-00	SCREW, WITH WASHER
7	6D3-14437-00-00	DUCT
8	6D3-14419-01-00	PIPE
9	90480-22M15-00	GROMMET
10	90464-12089-00	CLAMP
11	90119-08M22-00	BOLT, WITH WASHER
12	90480-22M15-00	GROMMET
13	6D3-14495-00-00	COLLAR
14	F1K-U8572-02-00	BRACKET 2
15	9572R-08300-00	NUT, FLANGE
16	90601-175UR-00	BAND, HOSE 75
17	90464-38800-00	CLAMP
18	90464-40825-00	CLAMP

YAMAHA

2009

WAVERUNNER VX CRUISERVX1100BH WAVERUNNER - VX1100BH

INTAKE 2

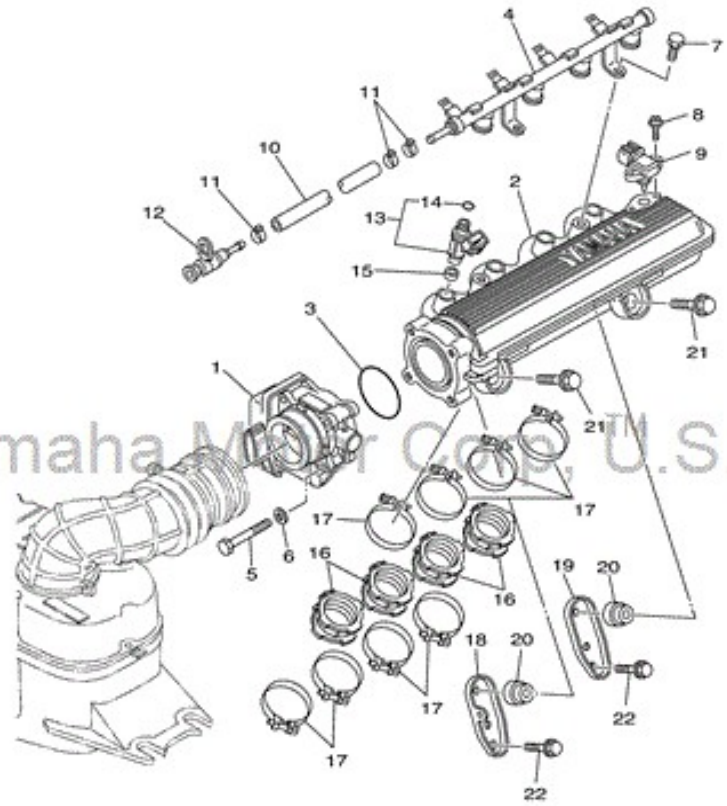

F1K1100-D060

(c) 2005-2016 Yamaha Motor Corporation, U.S.A.

©2014 Yamaha Motor Corporation, U.S.A. All rights reserved.

1	6D3-13750-00-00	THROTTLE BODY ASSY
2	6D3-13641-00-00	MANIFOLD, INTAKE 1
3	6D3-14457-00-00	SEAL
4	6D3-12880-00-00	DELIVERY PIPE
5	68V-13573-00-00	BOLT 1
6	68V-14475-00-00	WASHER
7	63P-14446-00-00	BOLT
8	6D3-81147-00-00	SCREW 3
9	68F-83688-00-00	SENSOR ASSY
10	6D3-14294-00-00	HOSE
11	90450-17M17-00	HOSE CLAMP ASSY
12	60E-24300-01-00	FUEL PIPE JOINT
13	60E-13761-10-00	INJECTOR
14	60E-14147-00-00	O-RING
15	90430-09002-00	GASKET
16	6D3-13795-01-00	JOINT, THROTTLE BODY 1
17	90450-57006-00	HOSE CLAMP ASSY
18	6D3-14413-00-00	STAY
19	6D3-14414-00-00	STAY 2
20	60E-14449-00-94	COLLAR
21	90119-08050-00	BOLT, WITH WASHER
22	90119-08074-00	BOLT, WITH WASHER

YAMAHA

2009

WAVERUNNER VX CRUISERVX1100BH WAVERUNNER - VX1100BH

JET UNIT 1

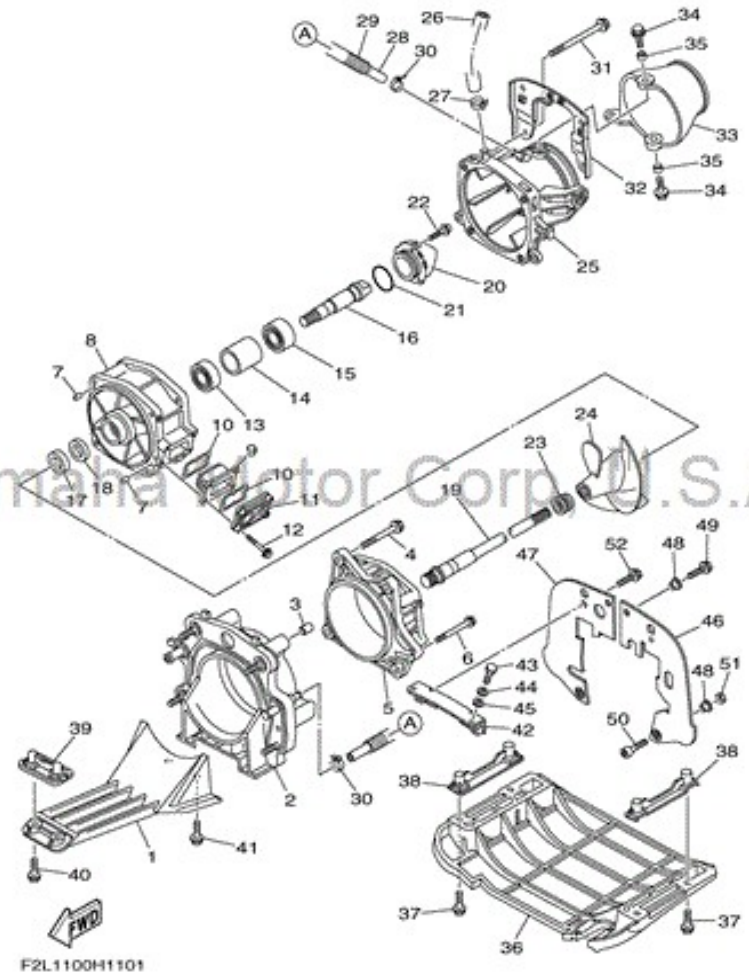

(c) 2005-2016 Yamaha Motor Corporation, U.S.A.

©2014 Yamaha Motor Corporation, U.S.A. All rights reserved.

1	6D3-R1333-00-94	SCREEN, INTAKE
2	6D3-G5831-00-00	PLATE, TRANSOM
3	99590-14016-00	PIN, DOWEL
4	90119-10836-00	BOLT,WITH WASHER
5	66V-51312-01-94	HOUSING, IMPELLER
6	90119-06835-00	BOLT,WITH WASHER
7	93606-12019-00	PIN, DOWEL
8	6B6-51315-01-94	DUCT, IMPELLER
9	66V-46882-00-00	FILTER
10	66V-42414-00-00	O-RING
11	66V-45214-00-94	COVER, WATER INLET 1
12	90119-06800-00	BOLT,WITH WASHER
13	93306-27211-00	BEARING
14	65V-45538-00-00	SPACER 1
15	93306-205U0-00	BEARING
16	6D3-45514-00-00	SHAFT, DRIVE 4
17	93101-21001-00	OIL SEAL
18	93101-21002-00	OIL SEAL
19	6D3-45511-00-00	SHAFT, DRIVE
20	6B6-51326-10-00	CAP
21	93210-464A3-00	O-RING
22	90110-06822-00	BOLT, HEXAGON SOCKET HEAD
23	6D3-R1319-00-00	CAP, IMPELLER
24	6D3-R1321-02-00	IMPELLER
25	6D3-R1318-00-00	NOZZLE
26	90445-16006-00	HOSE (L260)
27	90601-118UF-00	BAND, HOSE 18
28	90445-14008-00	HOSE (L355)
29	90446-20MF5-00	HOSE (L320)
30	90465-11829-00	CLAMP
31	90119-10837-00	BOLT,WITH WASHER
32	6D3-R1341-00-00	BRACKET 1
33	6D3-R1313-00-00	NOZZLE, DEFLECTOR
34	90119-08840-00	BOLT, WITH WASHER
35	90387-08M06-00	COLLAR
36	F1K-U273B-04-00	PLATE 2, KIT W/ SPAC
37	90119-08823-00	BOLT, WITH WASHER
38	F1G-U8572-01-00	BRACKET 2
39	F1K-U8577-00-00	BRACKET, 3
40	90119-069UK-00	BOLT, WITH WASHER
41	90119-10805-00	BOLT, WITH WASHER
42	F1K-U7557-00-00	BRACKET
43	90109-08041-00	BOLT
44	92990-12200-00	WASHER, PLAIN
45	90430-12002-00	GASKET
46	F1K-U757E-01-00	PLATE, RUBBER 1
47	F1K-U757F-01-00	PLATE, RUBBER 2
48	90387-06080-00	COLLAR
49	90119-06827-00	BOLT, WITH WASHER
50	90101-069U0-00	BOLT
51	9572R-06300-00	NUT, NYLON
52	90119-089U7-00	BOLT, WITH WASHER

YAMAHA

2009

WAVERUNNER VX CRUISERVX1100BH WAVERUNNER - VX1100BH

JET UNIT 2

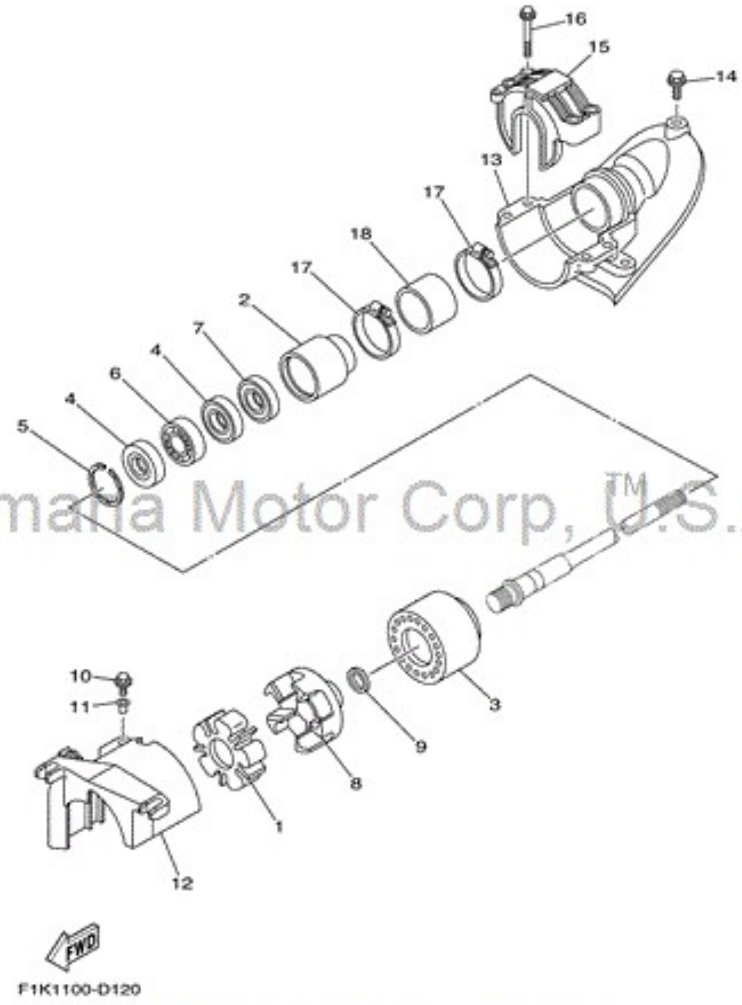

(c) 2005-2016 Yamaha Motor Corporation, U.S.A.

©2014 Yamaha Motor Corporation, U.S.A. All rights reserved.

1	6D3-4581J-00-00	RUBBER SHAFT COUPLING
2	6D3-45332-00-94	HOUSING, BEARING
3	6D3-45235-00-00	DAMPER
4	93101-25M55-00	OIL SEAL
5	93430-47M04-00	CIRCLIP
6	93306-205A3-00	BEARING
7	93101-25M56-00	OIL SEAL
8	6D3-45593-00-94	FLANGE, COUPLING 1
9	90201-248M5-00	WASHER, PLATE
10	90119-069UD-00	BOLT, WITH WASHER
11	90387-06M60-00	COLLAR
12	60E-R1381-01-00	COVER
13	F1K-U883E-00-00	JOINT, PIPE
14	90109-06832-00	BOLT
15	F1K-U2155-00-00	CAP
16	90119-089UU-00	BOLT, WITH WASHER
17	90601-162U5-00	BAND, HOSE 62
18	F1K-U883B-00-00	PIPE, 1

YAMAHA

2009

WAVERUNNER VX CRUISERVX1100BH WAVERUNNER - VX1100BH

JET UNIT 3

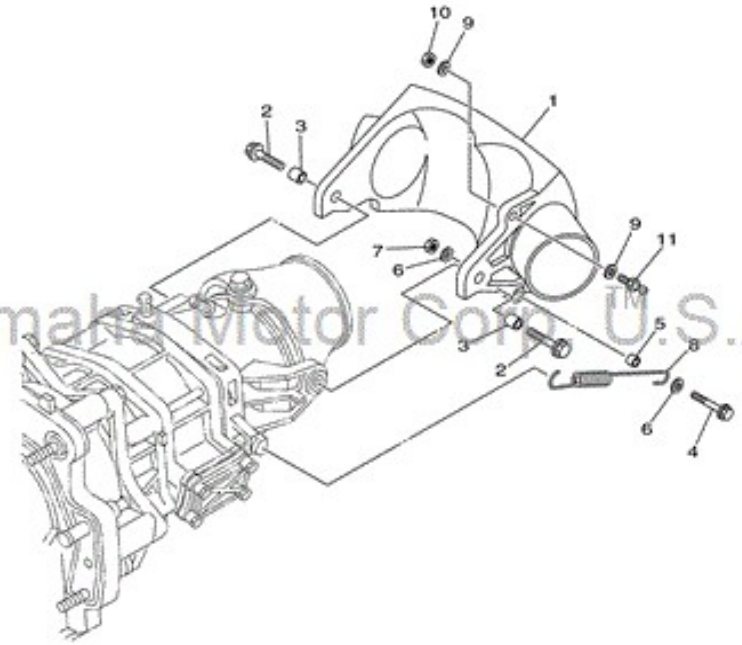

F1KD100-F130

(c) 2005-2016 Yamaha Motor Corporation, U.S.A.

©2014 Yamaha Motor Corporation, U.S.A. All rights reserved.

1	6D3-R1314-00-00	GATE, REVERSE
2	90119-08840-00	BOLT, WITH WASHER
3	90387-08M30-00	COLLAR
4	90119-069UX-00	BOLT, WITH WASHER
5	90387-06M30-00	COLLAR
6	90201-06801-00	WASHER, PLATE
7	9538R-06600-00	NUT
8	6D3-52358-00-00	SPRING, RETAINER
9	90201-06801-00	WASHER, PLATE
10	9538R-06600-00	NUT
11	EU0-U1461-02-00	STUD, JOINT BALL

YAMAHA

2009

WAVERUNNER VX CRUISERVX1100BH WAVERUNNER - VX1100BH

OIL COOLER

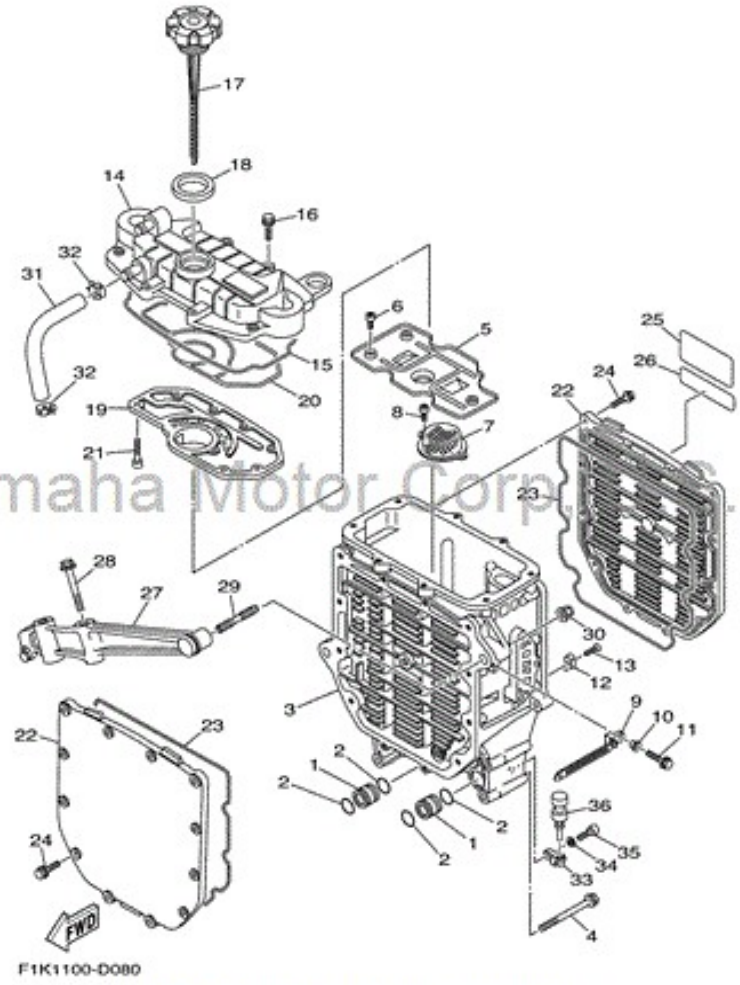

(c) 2005-2016 Yamaha Motor Corporation, U.S.A.

©2014 Yamaha Motor Corporation, U.S.A. All rights reserved.

1	60E-13446-00-00	CONNECTOR
2	93210-18322-00	O-RING
3	6D3-13462-00-94	CASE, OIL COOLER
4	90119-10020-00	BOLT, WITH WASHER
5	6B6-13317-00-00	PLATE, BAFFLE
6	91317-05014-00	BOLT
7	60E-13421-00-00	STRAINER 2
8	91317-06014-00	BOLT
9	90465-12M53-00	CLAMP
10	90387-06M05-00	COLLAR
11	97595-06520-00	BOLT, WITH WASHER
12	6E5-11325-00-00	ANODE
13	98780-04015-00	SCREW,FLAT HEAD
14	6D3-13463-00-94	COVER, OIL COOLER
15	60E-13475-00-00	GASKET
16	90105-06036-00	BOLT, FLANGE
17	60E-15362-00-00	PLUG, OIL LEVEL
18	60E-13473-00-00	O-RING
19	6D3-11165-00-00	PLATE, BREATHER
20	6D3-13477-00-00	GASKET
21	91317-05016-00	BOLT
22	6D3-13443-00-94	COVER, OIL COOLER
23	60E-13476-10-00	GASKET
24	90105-06M07-00	BOLT, FLANGE
25	6B6-83623-00-00	MARK 3
26	60E-83627-00-00	LABEL, CAUTION 7
27	6B6-13151-00-94	STAY
28	90119-10M02-00	BOLT, WITH WASHER
29	90116-10016-00	BOLT, STUD
30	90176-10001-00	NUT, CROWN
31	6D3-11167-00-00	PIPE, BREATHER 2
32	90467-170A0-00	CLIP
33	60E-51341-00-94	BRACKET 1
34	92995-06600-00	WASHER, PLATE
35	91380-06020-00	BOLT, HEXAGON SOCKET HEAD
36	90480-06M46-00	GROMMET

YAMAHA

2009

WAVERUNNER VX CRUISERVX1100BH WAVERUNNER - VX1100BH

OIL PUMP

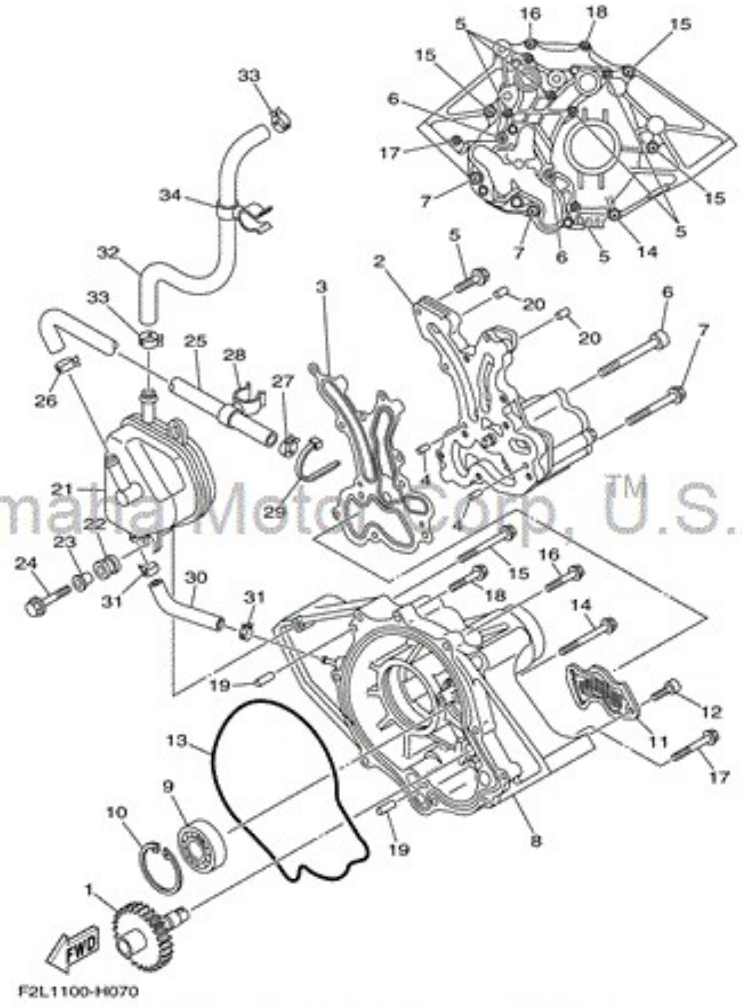

(c) 2005-2016 Yamaha Motor Corporation, U.S.A.

©2014 Yamaha Motor Corporation, U.S.A. All rights reserved.

1	6B6-13360-00-00	DRIVEN GEAR ASSY
2	6D3-13300-10-00	OIL PUMP ASSY
3	6B6-13563-01-00	GASKET
4	93603-12221-00	PIN, DOWEL
5	97513-06525-00	BOLT, WITH WASHER
6	90110-08041-00	BOLT, HEXAGON SOCKET HEAD
7	90119-08085-00	BOLT, WITH WASHER
8	6B6-13327-01-94	COVER, PUMP GEAR WIT
9	93306-30441-00	BEARING
10	99009-52500-00	CIRCLIP
11	6B6-13411-00-00	STRAINER, OIL
12	91317-06016-00	BOLT
13	6B6-13475-01-00	GASKET
14	90119-08045-00	BOLT, WITH WASHER
15	90119-08034-00	BOLT, WITH WASHER
16	90119-08043-00	BOLT, WITH WASHER
17	97513-06555-00	BOLT, WITH WASHER
18	97513-06535-00	BOLT, WITH WASHER
19	93608-16M16-00	PIN, DOWEL
20	93606-25M00-00	PIN, DOWEL
21	6D3-11164-00-00	SEPERATOR, OIL
22	6A0-82317-00-00	DAMPER, IGNITION COIL
23	90387-06119-00	COLLAR
24	90119-06M65-00	BOLT,WITH WASHER
25	6D3-11126-00-00	PIPE, BREATHER 3
26	90467-170A0-00	CLIP
27	90467-170A0-00	CLIP
28	90464-21001-00	CLAMP
29	90464-18006-00	CLAMP
30	6D3-11125-00-00	PIPE, BREATHER 4
31	90467-110A1-00	CLIP
32	6D3-11166-00-00	PIPE, BREATHER 1
33	90467-170A0-00	CLIP
34	90464-21001-00	CLAMP

YAMAHA

2009

WAVERUNNER VX CRUISERVX1100BH WAVERUNNER - VX1100BH

REPAIR KIT 1

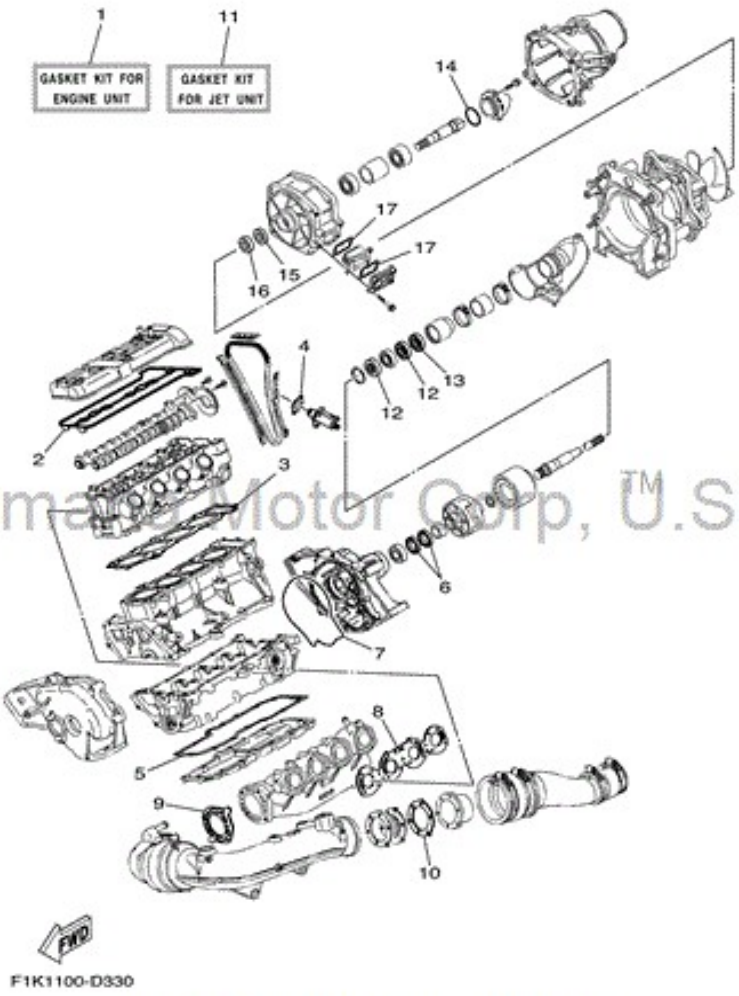

Yamaha Motor Corp, U.S.A

(c) 2005-2016 Yamaha Motor Corporation, U.S.A.

©2014 Yamaha Motor Corporation, U.S.A. All rights reserved.

1	6D3-W0001-00-00	GASKET KIT FOR ENGINE UNIT
2	60E-11193-01-00	GASKET, HEAD COVER 1
3	6D3-11181-00-00	GASKET, CYLINDER HEAD 1
4	4FM-12213-00-00	GASKET, TENSIONER CASE
5	6B6-13557-01-00	GASKET
6	93101-35004-00	OIL SEAL
7	6B6-13475-01-00	GASKET
8	6D3-14613-00-00	GASKET, EXHAUST PIPE
9	6D3-14739-00-00	GASKET, MUFFLER DAMPER 1
10	60E-14623-00-00	GASKET, EXHAUST PIPE
11	6D3-W0001-20-00	GASKET KIT FOR JET UNIT
12	93101-25M55-00	OIL SEAL
13	93101-25M56-00	OIL SEAL
14	93210-464A3-00	O-RING
15	93101-21002-00	OIL SEAL
16	93101-21001-00	OIL SEAL
17	66V-42414-00-00	O-RING

YAMAHA

2009

WAVERUNNER VX CRUISERVX1100BH WAVERUNNER - VX1100BH

SEAT UNDER LOCKER

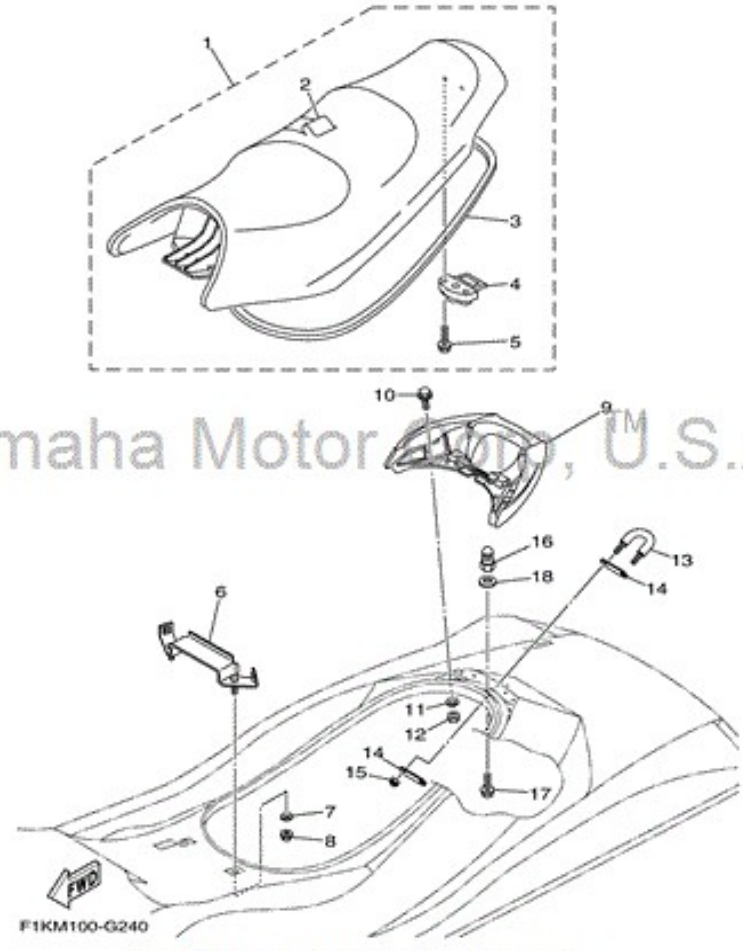

Yamaha Motor Corp, U.S.A
(c) 2005-2016 Yamaha Motor Corporation, U.S.A.
©2014 Yamaha Motor Corporation, U.S.A. All rights reserved.

1	F1K-U371A-70-00	DOUBLE SEAT ASSY | FOR CRUISER GRAY
	F1K-U371A-60-00	DOUBLE SEAT ASSY | FOR DELUXE BLACK
	F1K-U371A-12-00	DOUBLE SEAT ASSY | FOR DELUXE BLUE Not Available
	F1K-U371A-80-00	DOUBLE SEAT ASSY | FOR CRUISER BLACK
2	F1K-U371B-10-00	COVER, SEAT 1 | FOR DELUXE BLUE
	F1K-U371B-70-00	COVER, SEAT 1 | FOR CRUISER GRAY
	F1K-U371B-80-00	COVER, SEAT 1 | FOR CRUISER BLACK
	F1K-U371B-60-00	COVER, SEAT 1 | FOR DELUXE BLACK
3	F1K-U2664-01-00	PACKING
4	F1B-U3850-02-00	SEAT LOCK ASSY
5	90119-069UP-00	BOLT, WITH WASHER
6	F1K-U378C-00-00	STAY, SEAT 1
7	90201-099U3-00	WASHER, PLATE
8	9572R-08300-00	NUT, FLANGE
9	F1K-U271B-04-00	GRIP, HAND
10	90119-06820-00	BOLT, WITH WASHER
11	9299R-06200-00	WASHER
12	9572R-06300-00	NUT, NYLON
13	F1K-61628-00-00	STERN EYE
14	GP7-U4953-10-00	PLATE A
15	9572R-08300-00	NUT, FLANGE
16	F1K-U3774-00-00	PIN
17	90119-10804-00	BOLT,WITH WASHER
18	9299R-10200-00	WASHER

YAMAHA

2009

WAVERUNNER VX CRUISERVX1100BH WAVERUNNER - VX1100BH

STARTING MOTOR

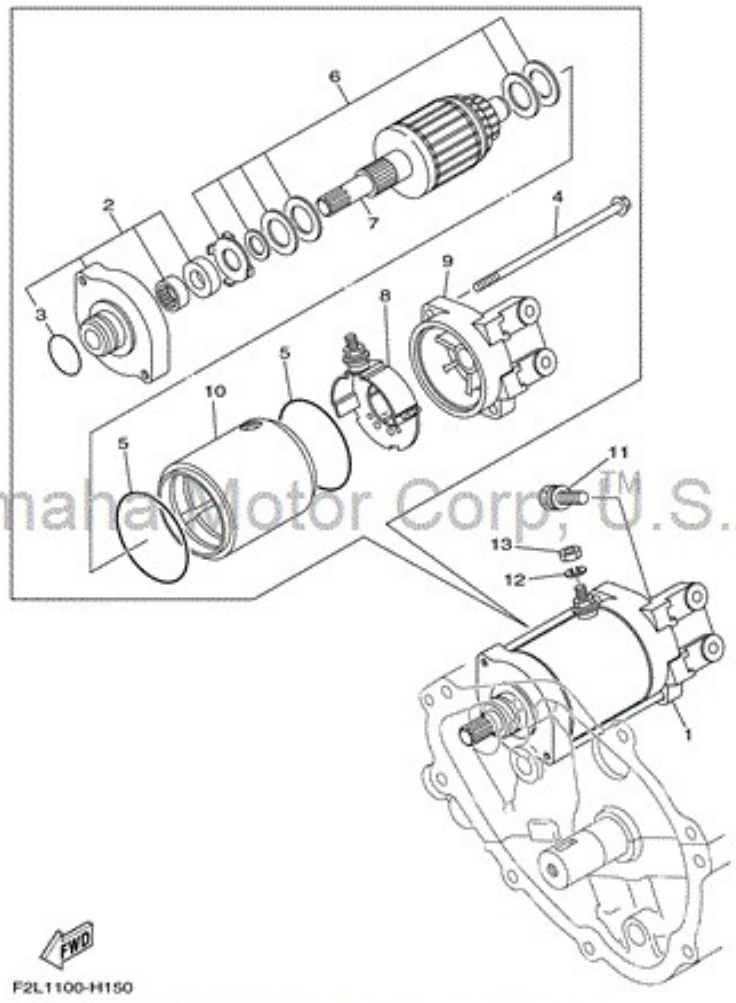

Yamaha Motor Corp, U.S.A
(c) 2005-2016 Yamaha Motor Corporation, U.S.A.
©2014 Yamaha Motor Corporation, U.S.A. All rights reserved.

1	6D3-81800-00-00	STARTING MOTOR ASSY
2	6M6-81830-00-00	FRONT BRACKET ASSY
3	1FK-81847-00-00	O-RING
4	6M6-81826-00-00	BOLT
5	11H-81844-00-00	GASKET
6	3AJ-81809-00-00	WASHER KIT
7	6M6-81850-00-00	ARMATURE ASSY
8	6M6-81840-10-00	BRUSH HOLDER ASSY
9	6D3-81820-00-00	REAR BRACKET ASSY
10	60E-81810-00-00	STATOR ASSY
11	97513-08530-00	BOLT, WITH WASHER
12	92990-06100-00	WASHER, SPRING
13	95380-06700-00	NUT

YAMAHA

2009

WAVERUNNER VX CRUISERVX1100BH WAVERUNNER - VX1100BH

STEERING 1

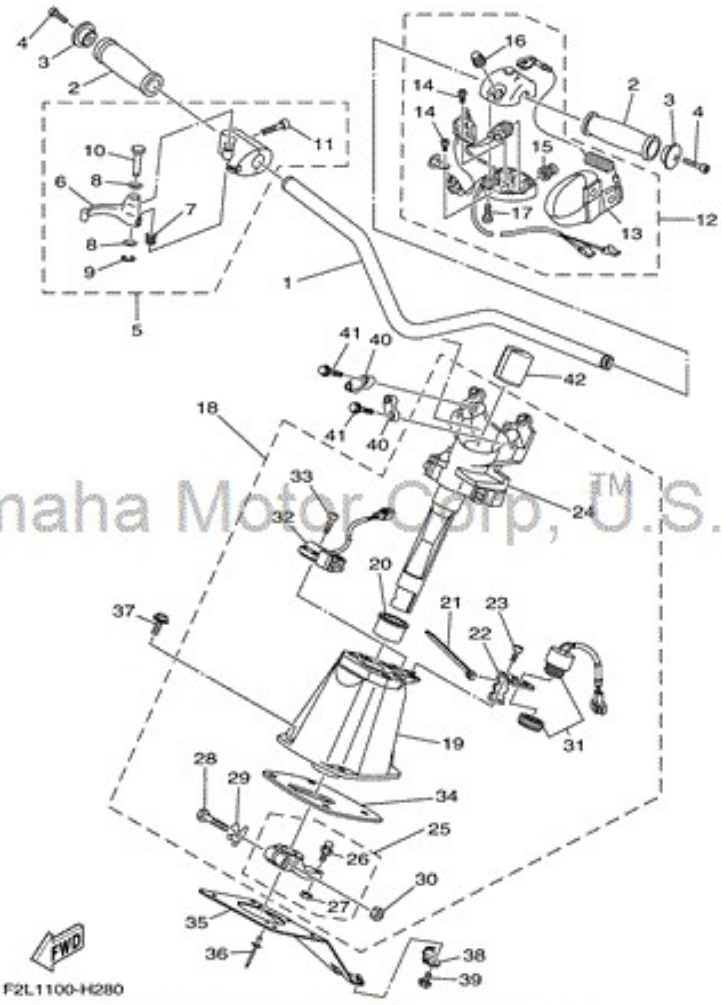

(c) 2005-2016 Yamaha Motor Corporation, U.S.A.

©2014 Yamaha Motor Corporation, U.S.A. All rights reserved.

1	F1K-U1552-00-00	HANDLE
2	GP7-U155D-01-00	GRIP, HANDLE
3	GP7-U155F-00-00	GRIP, END
4	90110-05908-00	BOLT, HEXAGON SOCKET HEAD
5	F0D-67250-10-00	THROTTLE LEVER ASSY
6	F0D-67255-02-00	LEVER, THROTTLE
7	EW2-67256-00-00	SPRING
8	EW2-67258-01-00	WASHER, PLATE
9	EW2-67259-01-00	CIRCLIP
10	F0D-67257-00-00	SHAFT
11	F1X-6725F-01-00	BOLT, THROTTLE
12	FK7-68310-07-00	SWITCH BOX ASSY
13	EW2-68348-00-00	LANYARD, STOP SWITCH
14	97880-03008-00	SCREW, PAN HEAD
15	FK7-68312-02-00	STOP BUTTON COMP
16	FK7-68313-02-00	START BUTTON COMP.
17	97880-05025-00	SCREW, PAN HEAD
18	F1K-61400-01-00	STEERING MASTER ASSY
19	F1K-6152M-00-00	HOUSING ASSY
20	F1K-6134M-00-00	BUSH
21	703-82591-00-00	BAND
22	F1K-6146H-10-00	SPACER, BRKT.
23	F1B-613C1-00-00	SCREW
24	F1K-67410-00-00	SHAFT ASSY
25	F1K-6153R-00-00	ARM ASSY.
26	EU0-61461-02-00	STUD, JOINT BALL
27	95720-06300-00	NUT, SELF-LOCKING
28	F1K-61355-00-00	BOLT
29	F1K-6142B-00-00	PLATE, RETAINING
30	95720-08300-00	NUT, SELF-LOCKING
31	F1S-68341-00-00	BUZZER
32	F1W-68303-00-00	SENSOR ASSY
33	F1W-61516-00-00	BOLT
34	F1K-6143C-00-00	SEAL, RUBBER
35	F1K-U1467-00-00	BRACKET,STOPPER CABLE
36	90267-48806-00	RIVET, BLIND
37	90119-08836-00	BOLT,WITH WASHER
38	F1K-U1468-03-00	STOPPER, CABLE
39	90119-069UH-00	BOLT, WITH WASHER
40	EU0-23814-30-00	HOLDER, HANDLE UPPER
41	90119-089UU-00	BOLT, WITH WASHER
42	F1K-U1949-00-00	PLUG

YAMAHA

2009

WAVERUNNER VX CRUISERVX1100BH WAVERUNNER - VX1100BH

STEERING 2

Yamaha Motor Corp, U.S.A
(c) 2005-2016 Yamaha Motor Corporation, U.S.A.
©2014 Yamaha Motor Corporation, U.S.A. All rights reserved.

1	F1K-U156E-01-00	PAD 1
2	F1K-U143D-01-00	PAD, STEERING 1
3	F1K-U143E-01-00	PAD, STEERING 2
4	F1K-U142D-00-00	COVER, PAD
5	90154-06017-00	SCREW, BINDING
6	90149-05903-00	SCREW
7	90167-04003-00	SCREW, TAPPING

YAMAHA

2009

WAVERUNNER VX CRUISERVX1100BH WAVERUNNER - VX1100BH

VALVE

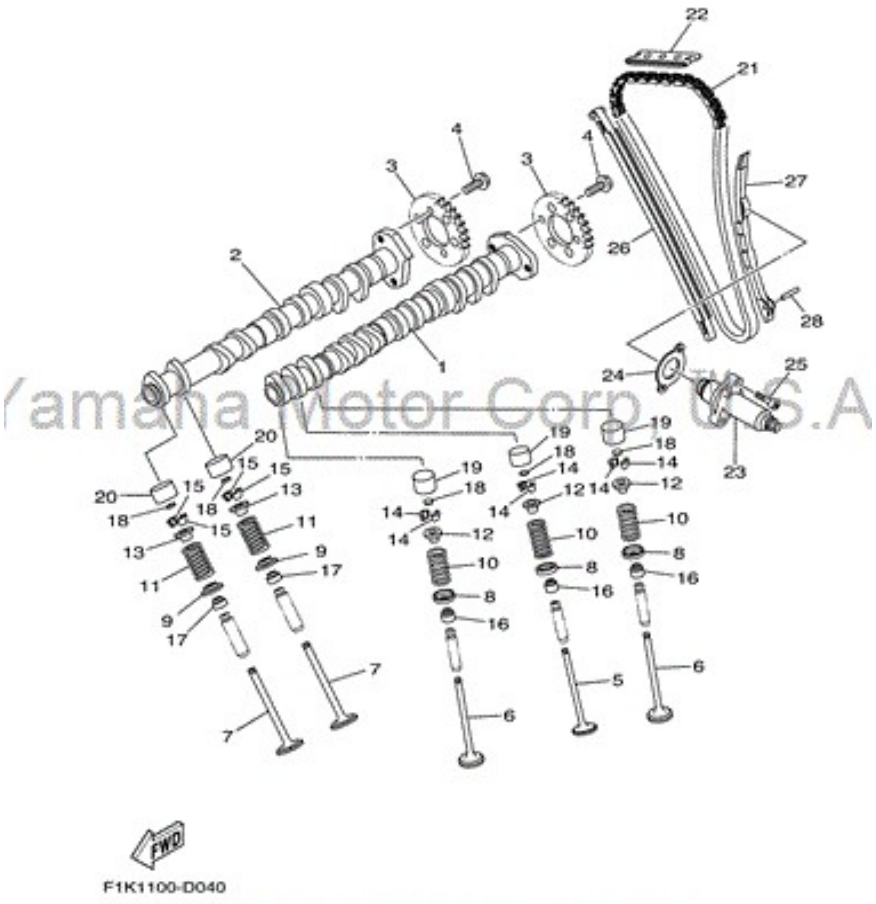

(c) 2005-2016 Yamaha Motor Corporation, U.S.A.

©2014 Yamaha Motor Corporation, U.S.A. All rights reserved.

27	4XV-12252-00-00	DAMPER, CHAIN 2
28	93607-54002-00	PIN, DOWEL

1	6D3-12171-11-00	CAMSHAFT 1
2	6D3-12181-00-00	CAMSHAFT 2
3	6D3-12176-00-00	SPROCKET, CAM CHAIN
4	90105-07004-00	BOLT, FLANGE
5	4XV-12111-00-00	VALVE, INTAKE
6	4XV-12112-00-00	VALVE, INTAKE 2
7	5LV-12121-00-00	VALVE, EXHAUST
8	1HX-12116-01-00	SEAT, VALVE SPRING
9	3GM-12126-00-00	SEAT, VALVE SPRING 2
10	4XV-12113-00-00	SPRING, VALVE INNER
11	4XV-12114-00-00	SPRING, VALVE OUTER
12	1HX-12117-00-00	RETAINER, VALVE SPRING
13	1WG-12117-00-00	RETAINER, VALVE SPRING
14	1HX-12118-00-00	LOCK, VALVE SPRING RETAINER
15	1WG-12118-00-00	LOCK, VALVE SPRING RETAINER
16	4TV-12119-00-00	SEAL, VALVE STEM
17	4SV-12119-00-00	SEAL, VALVE STEM
18	1HX-12168-K1-00	PAD, ADJUSTING 2 (1.60) | UR
	1HX-12168-M1-00	PAD, ADJUSTING 2 (1.65) | UR
	1HX-12168-R1-00	PAD, ADJUSTING 2 (1.70) | UR
	1HX-12168-U1-00	PAD, ADJUSTING 2 (1.75) | UR
	1HX-12168-W1-00	PAD, ADJUSTING 2 (1.80) | UR
	1HX-12168-Y1-00	PAD, ADJUSTING 2 (1.85) | UR
	1HX-12169-11-00	PAD, ADJUSTING 2 (1.90) | UR
	1HX-12169-31-00	PAD, ADJUSTING 2 (1.95) | UR
	1HX-12169-50-00	PAD, ADJUSTING 2 (2.00) | UR
	1HX-12169-70-00	PAD, ADJUSTING 2 (2.05) | UR
	1HX-12169-90-00	PAD, ADJUSTING 2 (2.10) | UR
	1HX-12169-E0-00	PAD, ADJUSTING 2 (2.15) | UR
	1HX-12169-G0-00	PAD, ADJUSTING 2 (2.20) | UR
	1HX-12169-J0-00	PAD, ADJUSTING 2 (2.25) | UR
	1HX-12169-L0-00	PAD, ADJUSTING 2 (2.30) | UR
	1HX-12169-N0-00	PAD, ADJUSTING 2 (2.35) | UR
	1HX-12169-T0-00	PAD, ADJUSTING 2 (2.40) | UR
	1HX-12168-H1-00	PAD, ADJUSTING 2 (1.55) | UR
	1HX-12168-F0-00	PAD, ADJUSTING 2 (1.50) | UR
	1HX-12168-A0-00	PAD, ADJUSTING 2 (1.45) | UR
	1HX-12168-80-00	PAD, ADJUSTING 2 (1.40) | UR
	1HX-12168-60-00	PAD, ADJUSTING 2 (1.35) | UR
	1HX-12168-00-00	PAD, ADJUSTING 2 (1.20) | UR
	1HX-12168-20-00	PAD, ADJUSTING 2 (1.25) | UR
	1HX-12168-40-00	PAD, ADJUSTING 2 (1.30) | UR
19	3LN-12153-10-00	LIFTER, VALVE | YELLOW
20	3FV-12153-10-00	LIFTER, VALVE | YELLOW
21	94591-49130-00	CHAIN
22	5BE-12241-00-00	GUIDE, STOPPER 2
23	6D3-12210-00-00	TENSIONER ASSY, CAM CHAIN
24	4FM-12213-00-00	GASKET, TENSIONER CASE
25	91380-06025-00	BOLT
26	6D3-12251-00-00	DAMPER, CHAIN 1

YAMAHA

2009

WAVERUNNER VX CRUISERVX1100BH WAVERUNNER - VX1100BH

VENTILATION

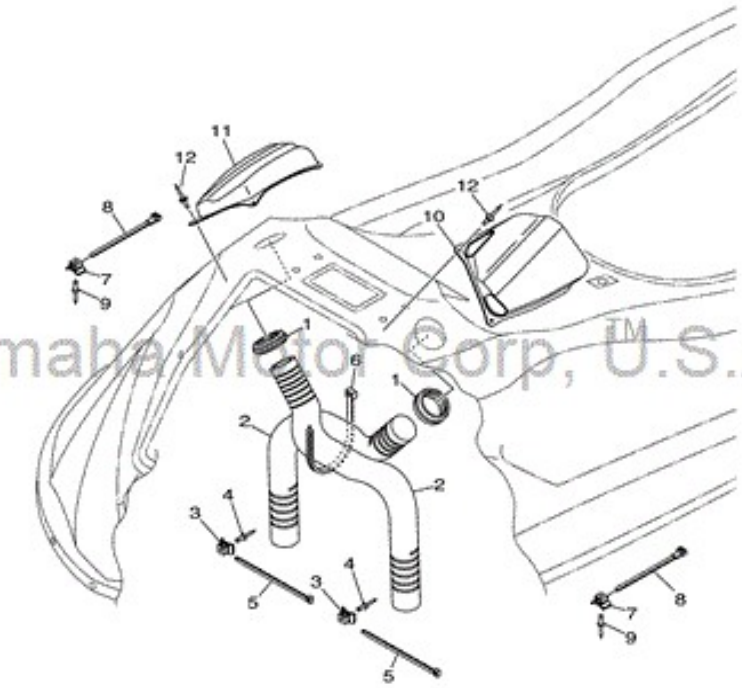

F1K1100-D230

Yamaha Motor Corp, U.S.A

(c) 2005-2016 Yamaha Motor Corporation, U.S.A.

©2014 Yamaha Motor Corporation, U.S.A. All rights reserved.

1	F1K-U2127-00-00	BASE, AIR INTAKE
2	F1K-U213G-00-00	HOSE, VENTILATOR 2
3	90600-91736-00	CLAMP COMP.
4	90267-48802-00	RIVET, BLIND
5	90464-99804-00	CLAMP
6	90601-200U7-00	BAND
7	90600-91736-00	CLAMP COMP.
8	90464-32801-00	CLAMP
9	90267-489U6-00	RIVET, BLIND
10	F1K-U2187-00-00	BOX, INDUCTION 1
11	F1K-U2188-00-00	BOX, INDUCTION 2
12	90267-48806-00	RIVET, BLIND