# SEADOO

# 1998

# GSX Limited, 5629/5845

## Crankcase, Rotary Valve

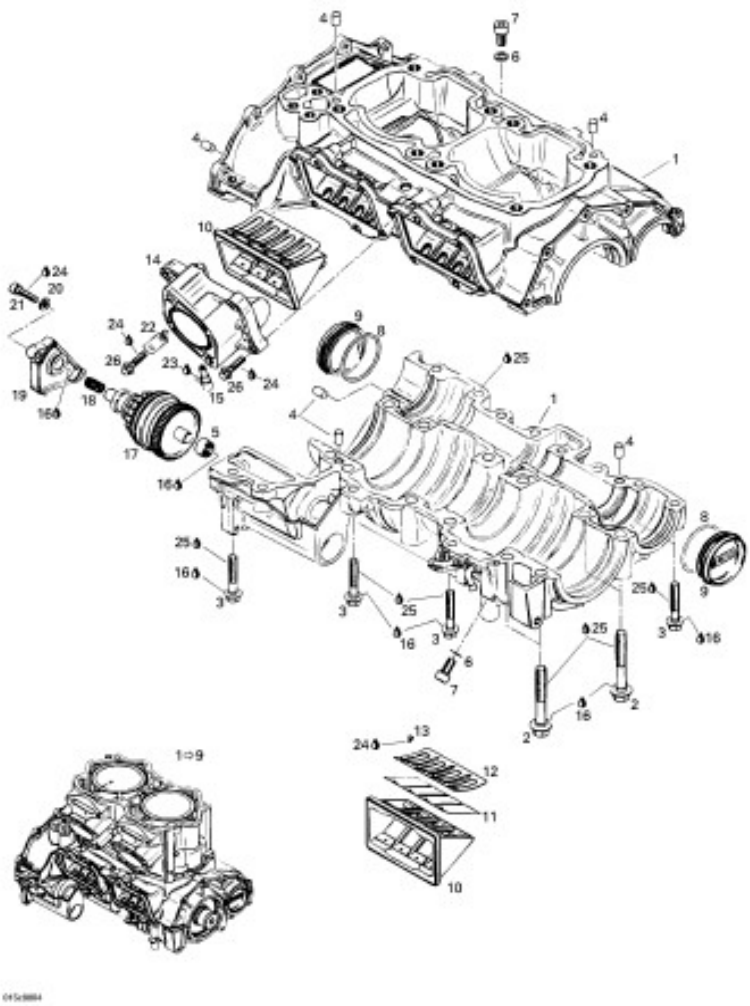

| | | |
|---|---|---|
| 1 | 290094702 | Short Block Ass'y. Includes 1 - 9. |
| 1 | 290887754 | Crankcase Ass'y <<947>> (Silver). Includes 1 - 7. |
| 2 | 290941333 | Flanged Screw M10 x 73,5 |
| 3 | 290940638 | Flanged Screw M8 x 45 |
| 4 | 290632010 | Pin 8 x 12 |
| 5 | 290232480 | Needle Bushing |
| 6 | 420950141 | Sealing Ring |
| 7 | 290440193 | Socket Head Screw M8 x 16 |
| 8 | 290230300 | O-Ring |
| 9 | 290811200 | Bearing Cover |
| 10 | 290924602 | Reed Valve Ass'y. Includes 10 - 13. |
| 11 | 290924612 | Reed Pedal |
| 12 | 290924617 | Pedal Stop Reed |
| 13 | 420941215 | Oval Head Screw M3 x 5 |
| 14 | 290867833 | Carburator Adapter Ass'y. Includes 14 - 15. |
| 15 | 420956510 | Check Valve |
| 16 | 413707000 | Molykote 111 |
| 17 | 290888040 | Starter Drive Ass'y |
| 18 | 290938204 | Spring |
| 19 | 290811210 | Cover |
| 20 | 290845020 | Spring Washer |
| 21 | 290840401 | Socket Head Screw M6 x 22 |
| 22 | 290953330 | Wire Support |
| 23 | 413711400 | Loctite 648, 10 ml |
| 24 | 293800015 | Loctite 242, 10 ml |
| 25 | 293800038 | Loctite 515, 50 ml |
| 26 | 290240033 | Hex. Screw M6 x 25 |
| 27 | 290888131 | Engine Gasket Set (Not Shown) |

# SEADOO

# 1998

# GSX Limited, 5629/5845

## Crankshaft And Pistons

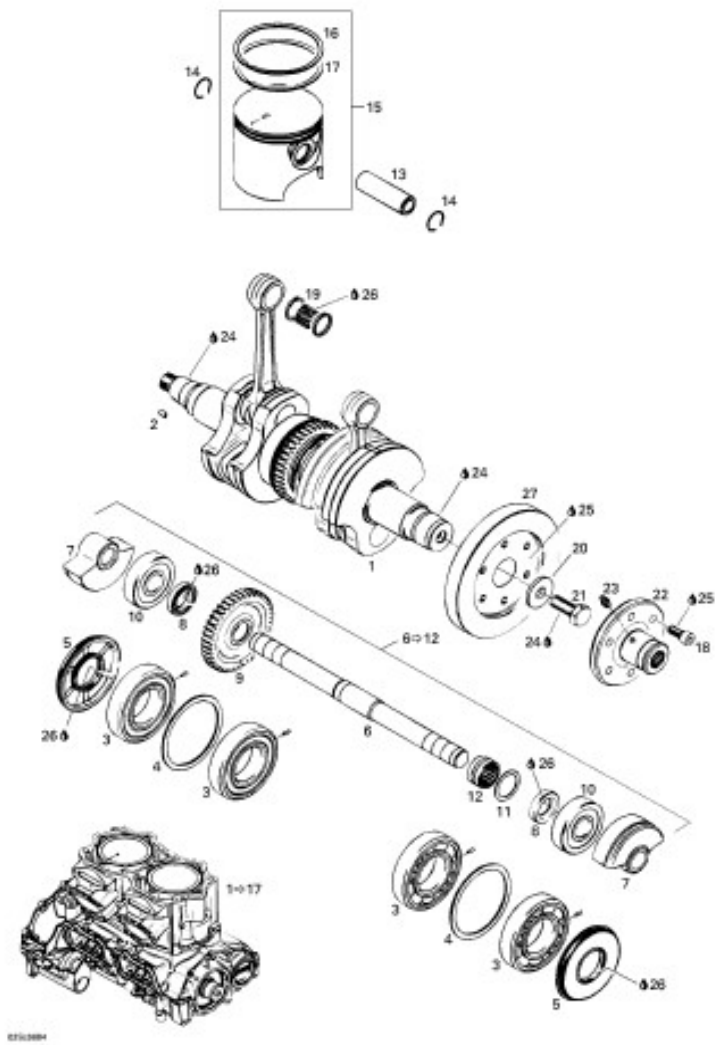

| | | |
|---|---|---|
| 1 | 290094702 | Short Block Ass'y. Includes 1 - 17. |
| 1 | 290887762 | Crankshaft Ass'y. Includes 1 - 5. |
| 2 | 420246055 | Woodruff Key |
| 3 | 420432271 | Ball Bearing 6208 Ass'y |
| 4 | 290926190 | Washer |
| 5 | 290931731 | Oil Seal |
| 6 | 290837387 | Shaft Balance Ass'y. Includes 6 - 12. |
| 6 | 420837380 | Shaft Balance |
| 7 | 420818950 | Mass Balance |
| 8 | 420930395 | Seal Oil |
| 9 | 420834340 | Gear Balance, 43 Teeth |
| 10 | 290932098 | Ball Bearing 6304 |
| 11 | 420927192 | Washer |
| 12 | 290232555 | Needle Bearing |
| 13 | 290916395 | Piston Pin |
| 14 | 290845465 | Circlip |
| 15 | 290887775 | Piston with 2 Rings, 87.91 mm. Includes 15 - 17. |
| | 290887776 | Piston Oversize, 2 Rings, 88.16 mm |
| 16 | 290815175 | Semi-Trapez Ring 88.00 mm (Silver) |
| | 290815176 | Semi-Trapez Ring 88.25 mm (Silver) |
| 17 | 290815190 | Semi-Trapez Ring 88.00 mm (Grey) |
| | 290815191 | Semi-Trapez Ring 88.25 mm (Grey) |
| 18 | 290240073 | Socket Head Screw M8 x 20 |
| 19 | 290832550 | Needle Bearing |
| 20 | 290827782 | Washer |
| 21 | 290640120 | Hex. Screw M12 x 30 |
| 22 | 290958122 | Coupling Flange Ass'y. Includes 22 - 23. |
| 23 | 290499113 | Grease Fitting |
| 24 | 293800015 | Loctite 242, 10 ml |
| 25 | 413711400 | Loctite 648, 10 ml |
| 26 | 413707000 | Molykote 111 |
| 27 | 290958082 | Coupling |
| 28 | 290888131 | Engine Gasket Set (Not Shown) |
| 29 | 290888136 | Cylinder Gasket Set (Not Shown) |

# SEADOO

# 1998

# GSX Limited, 5629/5845

## Cylinder, Exhaust Manifold

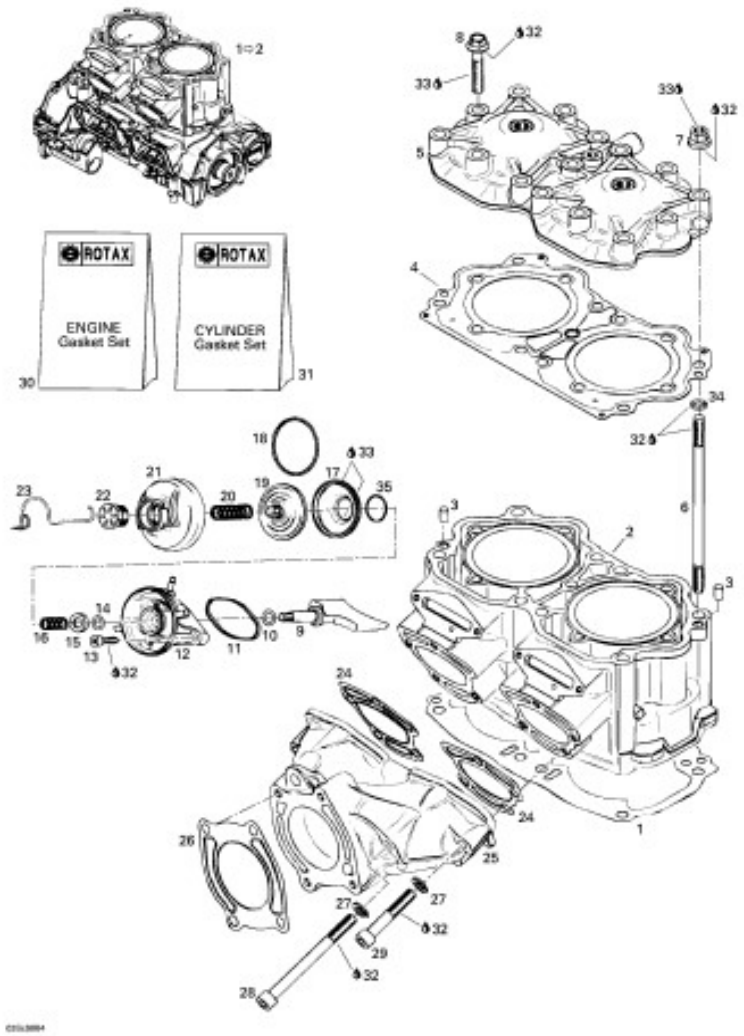


| | | |
|---|---|---|
| 1 | 290094702 | Short Block Ass'y. Includes 1 - 2. |
| 1 | 290931687 | Gasket Cylinder 0.8 mm |
| | 290931686 | Gasket Cylinder 0.6 mm |
| | 290931685 | Gasket Cylinder 0.5 mm |
| 2 | 290923569 | Cylinder with Sleeve (Silver) |
| 3 | 290632010 | Pin 8 x 12 |
| 4 | 290931702 | Cylinder Head Gasket |
| 5 | 290923584 | Head Cylinder (Silver) |
| 6 | 290640237 | Stud M10 x 201 |
| 7 | 290842863 | Stud Nut M10 |
| 8 | 290841708 | Screw Hex. Flange M10 x 60 |
| 9 | 290854410 | Piston Exhaust |
| 10 | 290931765 | O-Ring |
| 11 | 290931670 | Rubber Gasket |
| 12 | 290854435 | Valve Housing |
| 13 | 210100012 | Socket Head Screw M6 x 25 |
| 14 | 290931765 | O-Ring |
| 15 | 290926220 | Support Ring |
| 16 | 290838260 | Spring |
| 17 | 420260728 | Bellows |
| 18 | 290239048 | Hose Spring |
| 19 | 290854445 | Exhaust Valve |
| 20 | 290939137 | Spring Compression |
| 21 | 290911555 | Cover Valve |
| 22 | 420241220 | Screw Adjustment |
| 23 | 420838082 | Clip Spring |
| 24 | 293250081 | Gasket. not included in kit |
| 25 | 290979604 | Exhaust Manifold (Silver) |
| 26 | 293250080 | Gasket. not included in kit |
| 27 | 213000003 | Lock Washer 10 mm |
| 28 | 290941483 | Socket Head Screw M10 x 110 |
| 29 | 215906060 | Socket Head Screw M10 x 60 |
| 30 | 290888131 | Engine Gasket Set |
| 31 | 290888136 | Cylinder Gasket Set |
| 32 | 293800015 | Loctite 242, 10 ml |
| 33 | 413707000 | Molykote 111 |
| 34 | 290850460 | O-Ring |
| 35 | 420838253 | Clamp Spring |

# SEADOO

# 1998

# GSX Limited, 5629/5845

## Engine Support And Muffler

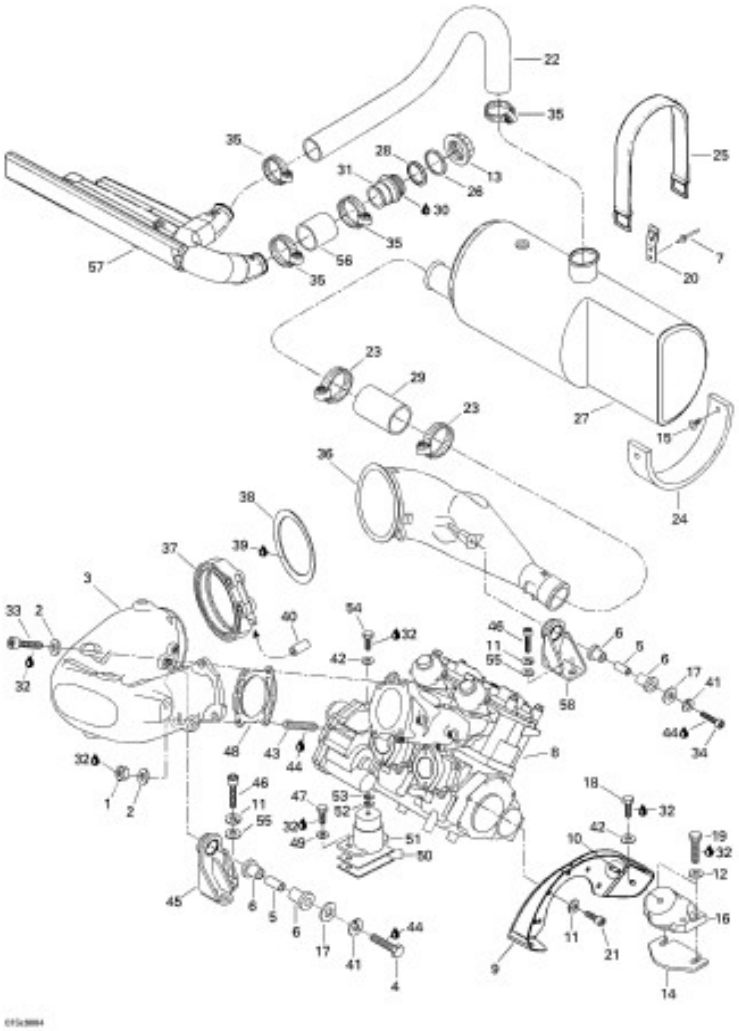

| | | |
|---|---|---|
| 1 | 211100052 | Hex. Flanged Nut M10 |
| 2 | 211200051 | Washer |
| 3 | 274000657 | Head Pipe Ass'y (Black) |
| 4 | 215604060 | Hex. Screw M10 x 40 |
| 5 | 274000254 | Bushing |
| 6 | 293830036 | Bushing Rubber |
| 7 | 293150037 | Rivet 3/16 |
| 8 | 270000368 | Rotax Engine 947 (Silver) |
| 9 | 270000359 | Engine Support (Black). Includes 9 - 10. |
| 10 | 210000002 | Hex. Screw M8 x 25 |
| 11 | 213000001 | Lock Washer 8 mm |
| 12 | 213200002 | Washer 8 mm |
| 13 | 274000224 | Nut M72 |
| 14 | 270000122 | Shim 0.3 mm |
| | 270000123 | Shim 1.3 mm |
| 15 | 293730011 | Dart (Black) |
| 16 | 270000352 | Rubber Mount |
| 17 | 217002600 | Flat Washer 10 mm |
| 18 | 215681660 | Hex. Screw M8 x 16 |
| 19 | 215084060 | Hex. Screw M8 x 40 |
| 20 | 293850024 | Strap Clip |
| 21 | 211000178 | Socket Head Screw M8 x 25 |
| 22 | 274000525 | Exhaust Hose |
| 23 | 293650064 | Tridon Clamp |
| 24 | 293830055 | Rubber Pad |
| 25 | 293850021 | Strap |
| 26 | 274000225 | Washer |
| 27 | 274000599 | Muffler (Silver) |
| 28 | 293250041 | Gasket |
| 29 | 274000530 | Exhaust Hose |
| 30 | 296000309 | Sealant Silicone, Clear |
| 31 | 274000505 | Outlet Exhaust |
| 32 | 293800015 | Loctite 242, 10 ml |
| 33 | 215903560 | Socket Head Screw M10 x 35 |
| 34 | 207004060 | Socket Head Screw M10 x 40 |
| 35 | 293650064 | Tridon Clamp |
| 36 | 274000658 | Exhaust Cone |
| 37 | 274000510 | Clamp |
| 38 | 274000511 | Sealing Ring |
| 39 | 413710300 | Sealant, Loctite 17914, 80 ml |
| 40 | 275000007 | Hose 8 mm |
| 41 | 213000003 | Lock Washer 10 mm |
| 42 | 213200011 | Flat Washer 8 mm |
| 43 | 211300025 | Stud M10 x 55 |
| 44 | 293800005 | Loctite 271, 10 ml |
| 45 | 274000679 | Support Pipe |
| 46 | 211000178 | Socket Head Screw M8 x 25 |
| 47 | 215084060 | Screw Hex M8 x 40 |
| 48 | 293250080 | Gasket |
| 49 | 213200002 | Washer 8 mm |
| 50 | 270000122 | Shim 0.3 mm |
| | 270000123 | Shim 1.3 mm |
| 51 | 270000353 | Rubber Mount |
| 52 | 270000024 | Shim 0.4 mm |
| 53 | 270000025 | Shim 1.3 mm |
| 54 | 210000001 | Hex. Screw M8 x 20 |
| 55 | 293050001 | Washer 8 mm |
| 56 | 274000616 | Exhaust Hose |
| 57 | 295500682 | Muffler (Resonator) |
| 58 | 274000636 | Pipe Support |

# SEADOO

# 1998

# GSX Limited, 5629/5845

## Cooling System

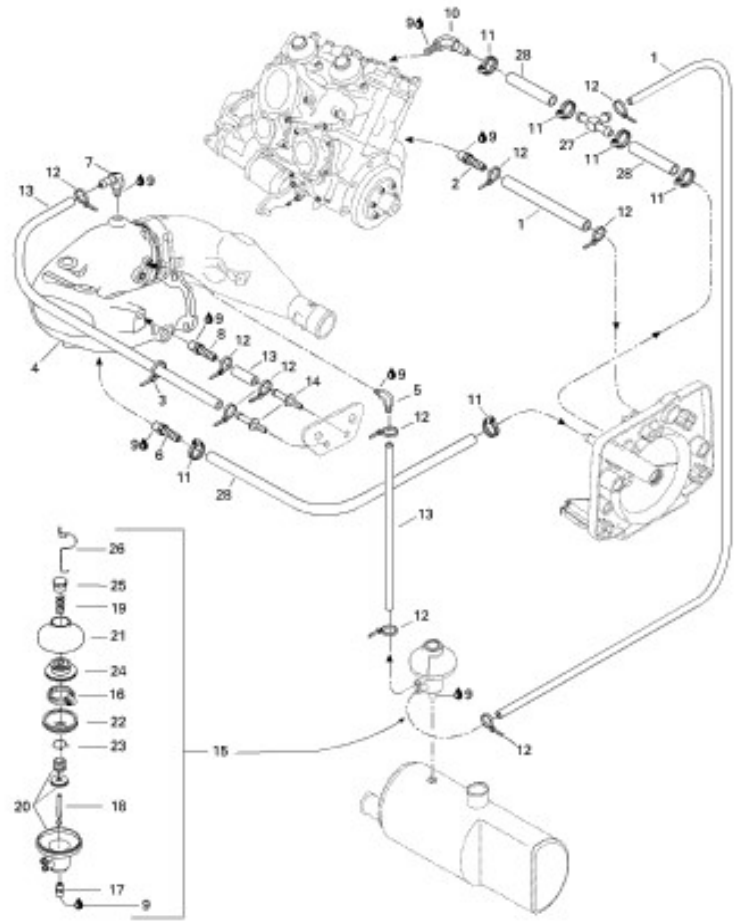

| | | |
|---|---|---|
| 1 | 275000007 | Hose 8 mm |
| 2 | 293710066 | Male Connector |
| 3 | 293750002 | Tie Rap 130 mm |
| 4 | 274000657 | Head Pipe Ass'y. Includes 4 - 8. |
| 5 | 293710018 | Elbow Fitting 90 Deg |
| 6 | 293710021 | Male Connector |
| 7 | 293710048 | Elbow Fitting 90 Deg |
| 8 | 293710037 | Male Connector |
| 9 | 293800013 | Loctite 56765, Pipe Sealant, 250ml |
| 10 | 293700023 | Elbow Fitting 90 Deg |
| 11 | 293650037 | Tridon Clamp |
| 12 | 293750001 | Tie Rap 94 mm |
| 13 | 276000048 | Hose 6 mm |
| 14 | 291000306 | Bleed Fitting |
| 15 | 274000556 | Pressure Regulator Ass'y. Includes 15 - 26. |
| 16 | 293650065 | Clamp |
| 17 | 293700010 | Male Fitting |
| 18 | 274000423 | Feeding Rod |
| 19 | 274000382 | Spring |
| 20 | XXX | Housing |
| 21 | 420911551 | Valve Cover |
| 22 | 420260721 | Bellows |
| 23 | 420838190 | Clamp |
| 24 | 420253255 | Exhaust Valve |
| 25 | 420241220 | Adjustment Screw |
| 26 | 420838082 | Spring Clamp |
| 27 | 293710025 | T Fitting |
| 28 | 276000001 | Hose 12.5 mm |

# SEADOO

# 1998

# GSX Limited, 5629/5845

## Oil Injection System

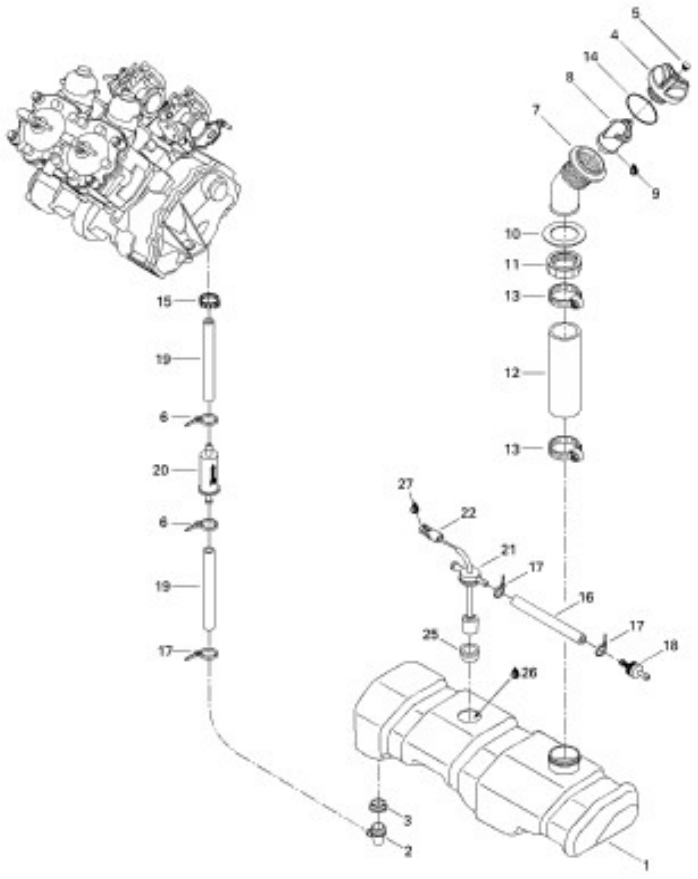


| | | |
|---|---|---|
| 1 | 275000172 | Oil Tank |
| 2 | 293710070 | Elbow Fitting 90 Deg |
| 3 | 293720008 | Grommet |
| 4 | 275000220 | Oil Cap. Includes 4 - 5. |
| 5 | 293000074 | Snap Cap |
| 6 | 293750001 | Tie Rap 94 mm |
| 7 | 275000187 | Filler Neck |
| 8 | 275000190 | Restrictor |
| 9 | 293800038 | Loctite 518, 50ml |
| 10 | 293250029 | Gasket |
| 11 | 211100012 | Filler Neck Nut |
| 12 | 275000188 | Filler Hose |
| 13 | 293650035 | Tridon Gear Clamp |
| 14 | 293250075 | Gasket |
| 15 | 293650042 | Oetiker Clamp |
| 16 | 275500139 | Hose 6 mm |
| 17 | 293750002 | Tie Rap 130 mm |
| 18 | 275500398 | Check Valve |
| 19 | 275000007 | Hose 8 mm |
| 20 | 275000051 | Oil Filter |
| 21 | 278001315 | Oil Level Sensor Ass'y. Includes 21 - 24. |
| 22 | 278000217 | Female Housing Tab (2 Ways) |
| 23 | 278000218 | Wire Seal (Not Shown) |
| 24 | 278000222 | Male Terminal (Not Shown) |
| 25 | 204470104 | Grommet |
| 26 | 413802900 | Injection Oil (12 x 1 Liter) |
| | 413803000 | Injection Oil (3 x 4 Liters) |
| | 413803200 | Injection Oil (205 Liters) |
| | 413710500 | Synthetic Injection Oil (12 x 1 Liter) |
| | 413711000 | Synthetic Injection Oil (3 x 4 Liters) |
| | 413710700 | Synthetic Injection Oil (205 Liters) |
| 27 | 293550004 | Dielectric Grease, 150 gr |

# SEADOO

# 1998

# GSX Limited, 5629/5845

## Fuel System

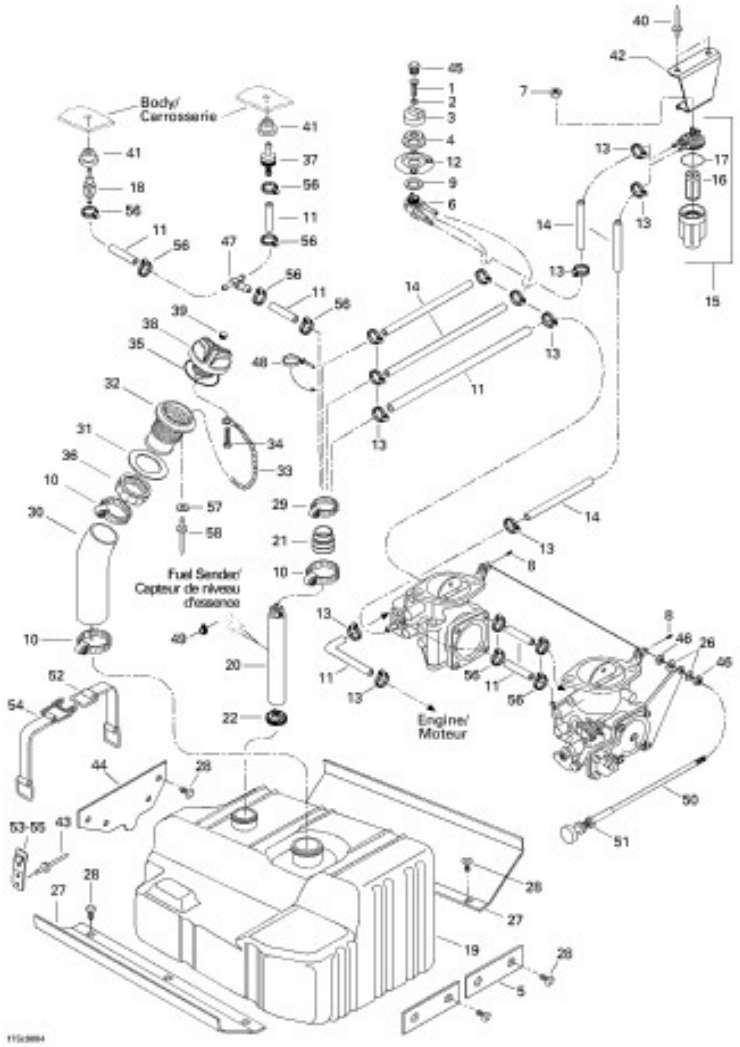


| | | |
|---|---|---|
| 51 | 211100030 | Nut |
| 52 | 293850026 | Strap. Includes 52 - 53. |
| 53 | 293850024 | Strap Clip |
| 54 | 293850025 | Strap. Includes 54 - 55. |
| 55 | 293850024 | Strap Clip |
| 56 | 293650042 | Oetiker Clamp |
| 57 | 213200018 | Washer 3 mm |
| 58 | 390407900 | Pop Rivet |

| | | |
|---|---|---|
| 1 | 212200004 | Countersunk Phillips Screw M4 x 8 |
| 2 | 213200010 | Washer 4 mm |
| 3 | 275500385 | Fuel Valve Knob |
| 4 | 212100009 | Hex. Plastic Nut |
| 5 | 292000343 | Rubber Pad |
| 6 | 275500400 | Fuel Valve |
| 7 | 212000001 | Elastic Stop Nut M6 |
| 8 | 210100014 | Socket Set Screw M4 x 6 |
| 9 | 293250004 | Gasket |
| 10 | 293650023 | Tridon Clamp |
| 11 | 275500139 | Hose 6 mm (Meter) |
| 12 | 275500386 | Fuel Valve Plate |
| 13 | 293650038 | Tridon Clamp |
| 14 | 275500345 | Hose 8 mm (Meter) |
| 15 | 275500358 | Fuel Filter Ass'y. Includes 15 - 17. |
| 16 | 275500089 | Fuel Filter |
| 17 | 275500090 | O-Ring |
| 18 | 275500104 | Pressure Relief Valve |
| 19 | 275500291 | Fuel Tank |
| 20 | 275500418 | Baffle. Includes 20 - 25. |
| 21 | 275500111 | Tube Adapter |
| 22 | 275500397 | Fuel Filter |
| 23 | 278000218 | Wire Seal (Not Shown) |
| 24 | 278000220 | Male Housing (2 Circuits) (Not Shown) |
| 25 | 278000223 | Female Terminal (Not Shown) |
| 26 | 213200001 | Flat Washer 6 mm |
| 27 | 293830040 | Rubber Pad |
| 28 | 293730006 | Dart (Black) |
| 29 | 293650035 | Tridon Clamp |
| 30 | 275500295 | Filler Hose Neck |
| 31 | 293250029 | Gasket |
| 32 | 275500231 | Filler Neck |
| 33 | 275500168 | Chain |
| 34 | 211000028 | Screw K40 x 10 |
| 35 | 293250075 | Gasket |
| 36 | 211100012 | Fuel Filler Neck Nut |
| 37 | 275500398 | Check Valve |
| 38 | 275500388 | Fuel Tank Cap. Includes 38 - 39. |
| 39 | 293000075 | Snap Cap |
| 40 | 293150039 | Rivet (3/16) |
| 41 | 293720029 | Grommet |
| 42 | 275500287 | Fuel Filter Support |
| 43 | 293150037 | Rivet 3/16 |
| 44 | 293830053 | Rubber Pad |
| 45 | 275500387 | Plug |
| 46 | 212100003 | Jam Nut M6 |
| 47 | 293710024 | <> Fitting |
| 48 | 294000606 | Tie Rap 180 mm |
| 49 | 293550004 | Dielectric Grease, 400gr |
| 50 | 270000383 | Choke Cable. Includes 50 - 51. |

# SEADOO

# 1998

# GSX Limited, 5629/5845

## Air Intake System

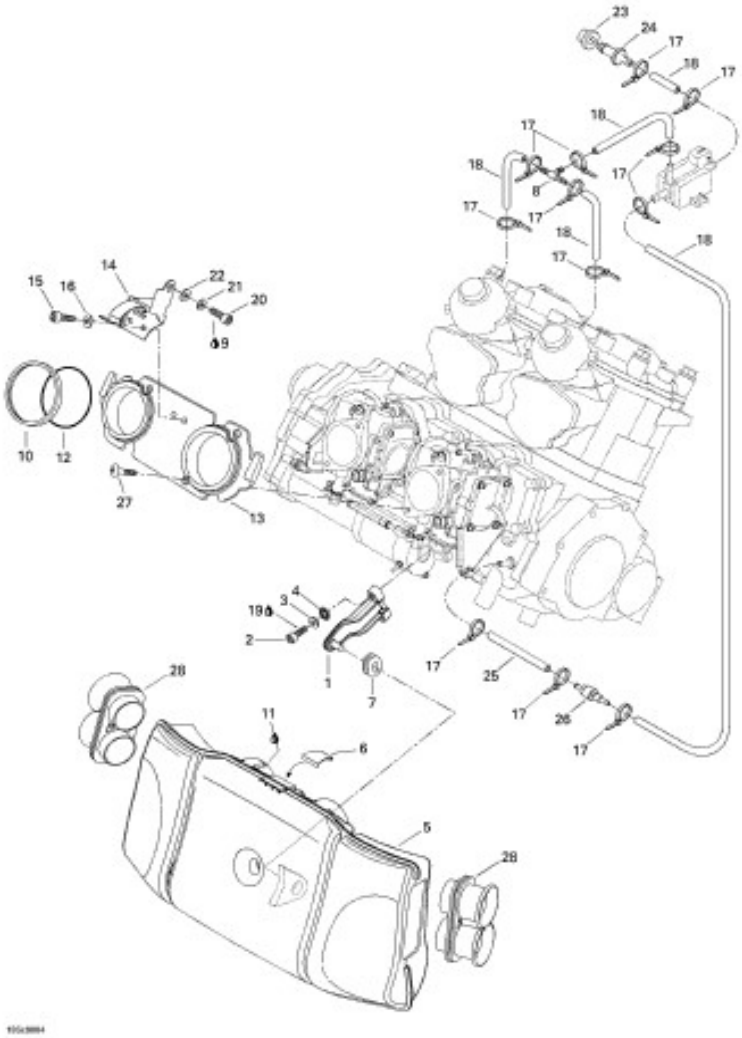

| | | |
|---|---|---|
| 1 | 273000123 | Air Silencer Support |
| 2 | 215963560 | Socket Head Screw M6 x 35 |
| 3 | 213200001 | Flat Washer 6 mm |
| 4 | 217161600 | Lock Serrated Washer 6 mm |
| 5 | 273000114 | Air Silencer |
| 6 | 273000112 | Support Plate |
| 7 | 293720052 | Grommet |
| 8 | 293710068 | "T" Fitting |
| 9 | 293800015 | Loctite 242, 10 ml |
| 10 | 293250076 | Gasket |
| 11 | 293550004 | Dielectric Grease, 400 gr |
| 12 | 293250065 | O-Ring |
| 13 | 270500383 | Muffler Adaptor |
| 14 | 270000419 | Holder |
| 15 | 211000177 | Socket Head Screw M6 x 12 |
| 16 | 213200001 | Flat Washer 6 mm |
| 17 | 293750001 | Tie Rap 94 mm |
| 18 | 270000374 | Hose 4.3 mm |
| 19 | 293800005 | Loctite 271, 10 ml |
| 20 | 215981660 | Socket Head Screw M8 x 16 |
| 21 | 213000001 | Lock Washer 8 mm |
| 22 | 213200011 | Flat Washer 8 mm |
| 23 | 293720029 | Grommet |
| 24 | 293700031 | Fitting |
| 25 | 276000048 | Hose 6 mm |
| 26 | 275500417 | Check Valve |
| 27 | 270500357 | Screw |
| 28 | 273000107 | Inler Tube |

# SEADOO

# 1998

# GSX Limited, 5629/5845

# Carburetors

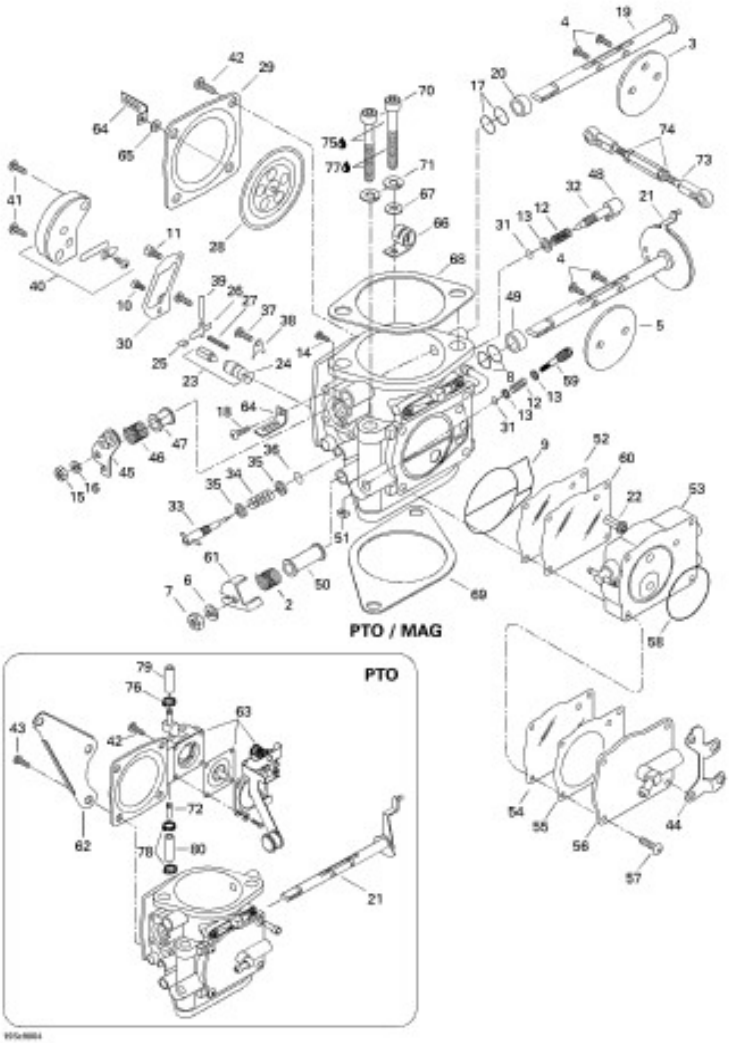


| | | |
|---|---|---|
| 1 | 270500332 | Carburetor BN46-42-6 (P.T.O Side). Includes 1 - 65. GSX LIMITED PTO 5629/5845. |
| | 270500331 | Carburetor BN46-42-5 (MAG Side). GSX LIMITED MAG 5629/5845. |
| 2 | 270500413 | Spring |
| 3 | XXX | Choke Valve |
| 4 | 270500156 | Screw |
| 5 | XXX | Throttle Valve |
| 6 | 270500011 | Spring Washer |
| 7 | 270500376 | Nut |
| 8 | 270500222 | Sealing Ring |
| 9 | 270500370 | O-Ring |
| 10 | 270500408 | Pilot Jet 82.5 |
| 11 | 270500411 | Main Jet 165.0 |
| 12 | 270500091 | Spring |
| 13 | 270500136 | Washer |
| 14 | 270500228 | Screw |
| 15 | 270500229 | Nut |
| 16 | 270500230 | Spring Washer |
| 17 | 270500234 | Sealing Ring |
| 18 | 270500358 | Screw. GSX LIMITED MAG 5629/5845. |
| 19 | XXX | Choke Shaft Ass'y |
| 20 | 270500239 | Ring |
| 21 | XXX | Throttle Shaft Ass'y (PTO). GSX LIMITED PTO 5629/5845. |
| | XXX | Throttle Shaft Ass'y (MAG). GSX LIMITED MAG 5629/5845. |
| 22 | 270500115 | Fuel Filter |
| 23 | 270500208 | Needle Valve 2.0 |
| 24 | 270500127 | O-Ring |
| 25 | 270500129 | Clip |
| 26 | 270500128 | Needle Valve Lever |
| 27 | 270500313 | Spring |
| 28 | 270500132 | Diaphragm Ass'y |
| 29 | 270500133 | Cover. GSX LIMITED MAG 5629/5845. |
| 30 | 270500131 | Gasket |
| 31 | 270500144 | O-Ring |
| 32 | 270500113 | Adjuster Screw |
| 33 | 270500020 | Idle Adjusting Screw |
| 34 | 270500019 | Spring |
| 35 | 270500018 | Washer |
| 36 | 270500119 | O-Ring |
| 37 | 270500155 | Screw and Spring Washer |
| 38 | 270500125 | Plate |
| 39 | 270500038 | Pin |
| 40 | 270500124 | Valve Ass'y |
| 41 | 270500123 | Screw |
| 42 | 270500243 | Screw. GSX LIMITED MAG 5629/5845. |
| | 270500322 | Screw. GSX LIMITED PTO 5629/5845. |
| 43 | 270500238 | Screw. GSX LIMITED PTO 5629/5845. |
| 44 | 270500407 | Bracket. GSX LIMITED MAG 5629/5845. |
| 45 | 270500414 | Choke lever |
| 46 | 270500382 | Spring |
| 47 | 270500381 | Ring |

# SEADOO

# 1998

# GSX Limited, 5629/5845

## Carburetors

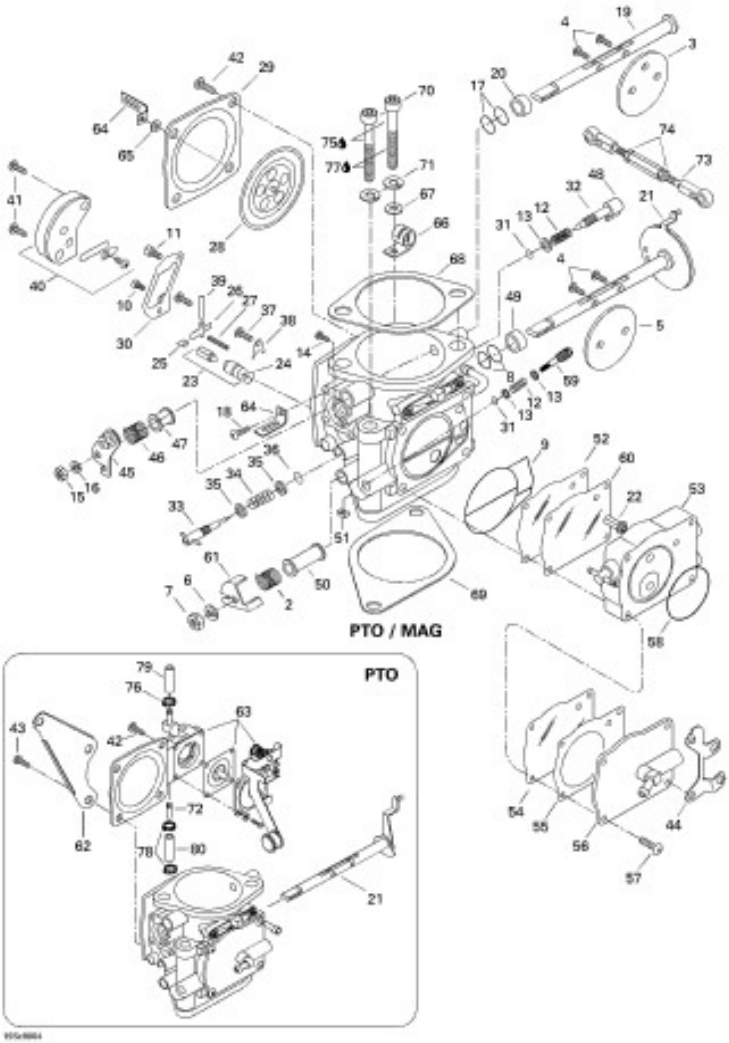


| | | |
|---|---|---|
| 48 | 270500154 | Cap |
| 49 | 270500353 | Ring |
| 50 | 270500378 | Ring |
| 51 | 270500249 | Nut. GSX LIMITED MAG 5629/5845. |
| 52 | 270500369 | Diaphragm. GSX LIMITED MAG 5629/5845. |
| 53 | 270500410 | Body Pump Ass'y. GSX LIMITED MAG 5629/5845. |
| 54 | 270500366 | Diaphragm. GSX LIMITED MAG 5629/5845. |
| 55 | 270500365 | Gasket. GSX LIMITED MAG 5629/5845. |
| 56 | 270500405 | Pump Cover. GSX LIMITED PTO 5629/5845. |
| | 270500409 | Pump Cover. GSX LIMITED MAG 5629/5845. |
| 57 | 270500303 | Screw. GSX LIMITED MAG 5629/5845. |
| 58 | 270500363 | O-Ring. GSX LIMITED MAG 5629/5845. |
| 59 | 270500288 | Adjuster Screw. GSX LIMITED MAG 5629/5845. |
| 60 | 270500368 | Diaphragm. GSX LIMITED MAG 5629/5845. |
| 61 | 270500412 | Throttle Lever Ass'y |
| 62 | 270500403 | Bracket. GSX LIMITED PTO 5629/5845. |
| 63 | 270500404 | Diaphragm Cover. GSX LIMITED PTO 5629/5845. |
| 64 | 270500359 | Plate. GSX LIMITED MAG 5629/5845. |
| 65 | 270500402 | Washer. GSX LIMITED MAG 5629/5845. |
| 66 | 293850018 | Clip. GSX LIMITED MAG 5629/5845. |
| 67 | 213200002 | Flat Washer 8 mm. GSX LIMITED MAG 5629/5845. |
| 68 | 270500384 | Gasket |
| 69 | 293250066 | Gasket |
| 70 | 211000112 | Socket Head Screw M8 x 120 |
| 71 | 217383600 | Lock Washer 8 mm |
| 72 | 270500348 | Recharge Jet |
| 73 | 270500319 | Carburator Linkage. Includes 73 - 74. |
| 74 | 270500351 | Nut |
| | 270500352 | Nut |
| 75 | 293550010 | Synthetic Grease, 400 gr |
| 76 | 293650071 | Oetiker Clamp |
| 77 | 293800015 | Loctite 242, 10 ml |
| 78 | 270500401 | Clip |
| 79 | 270500406 | Hose Ass'y |
| 80 | 270500308 | Hose 90 mm |

# SEADOO

# 1998

# GSX Limited, 5629/5845

## Magneto, Oil Pump

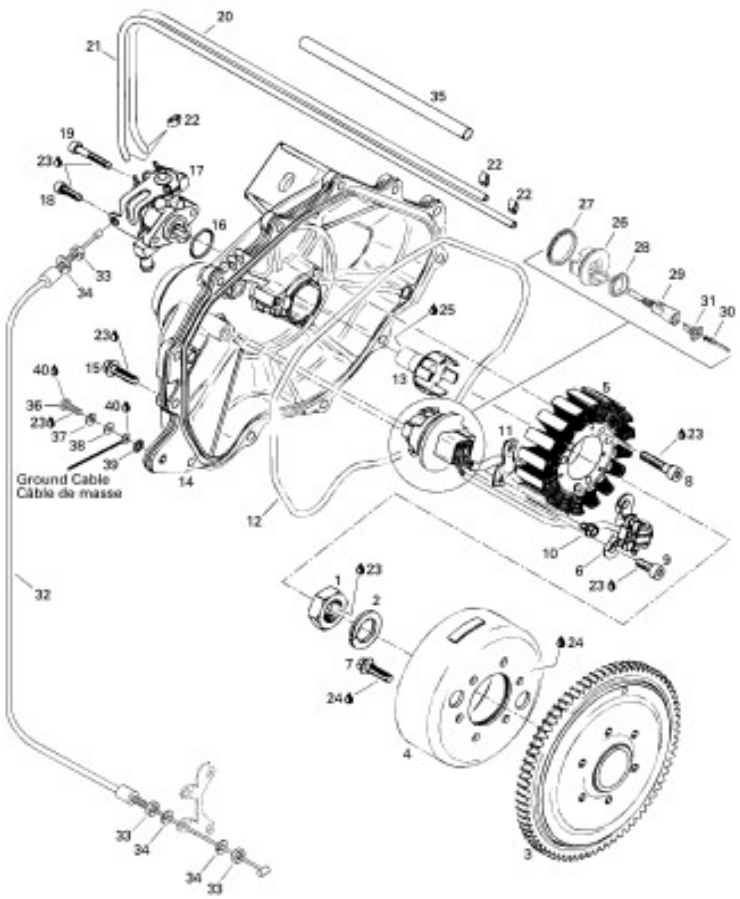


| | | |
|---|---|---|
| 1 | 420942220 | Hex. Nut M18 |
| 2 | 290945757 | Lock Washer 18 mm |
| 3 | 290966680 | Flywheel Hub |
| 4 | 290886598 | Magneto Flywheel |
| 5 | 290886588 | Stator Plate Ass'y |
| 6 | 290965641 | Sensor Ass'y |
| 7 | 290640171 | Socket Head Screw M6 x 16 |
| 8 | 420840886 | Socket Head Screw M6 x 30 |
| 9 | 420241236 | Socket Head Screw M6 x 16 |
| 10 | 215050848 | Hex. Screw M5 x 8 |
| 11 | 290853080 | Retainer Plate |
| 12 | 290931690 | O-Ring |
| 13 | 290837390 | Oil Pump Shaft |
| 14 | 290811062 | Ignition Cover |
| 15 | 290240032 | Hex. Screw M6 x 25 |
| 16 | 293300018 | O-Ring 18.5 mm |
| 17 | 290887335 | Oil Pump Ass'y |
| 18 | 215951660 | Socket Head Screw M5 x 16 |
| 19 | 290940883 | Socket Head Screw M5 x 30 |
| 20 | 275000039 | Hose |
| 21 | 275000039 | Hose |
| 22 | 290256408 | Clamp |
| 23 | 293800015 | Loctite 242, 10 ml |
| 24 | 413711400 | Loctite 648, 10 ml |
| 25 | 413707000 | Molykote 111 |
| 26 | 270000138 | Adaptor |
| 27 | 293300033 | Gasket |
| 28 | 293200030 | Gasket |
| 29 | 270000137 | Housing Tab Female 6 ways |
| 30 | 278000631 | Terminal Male |
| 31 | 278000737 | (Female) Secondary Lock (6 Circuits) (Deutsch) |
| 32 | 270000382 | Injection Cable. Includes 32 - 34. |
| 33 | 212100003 | Nut Hex. M6 |
| 34 | 217361500 | Washer Lock 6 mm |
| 35 | 290260437 | Protector Hose |
| 36 | 215061660 | Hex. Screw M6 x 16 |
| 37 | 217361500 | Lock Washer 6 mm |
| 38 | 213200007 | Flat Washer 6 mm |
| 39 | 217161600 | Ext. Tooth Washer 6 mm |
| 40 | 293550004 | Dielectric Grease, 150 gr |
| 41 | 290888131 | Engine Gasket Set (Not Shown) |
| 42 | 290888136 | Cylinder Gasket Set (Not Shown) |

# SEADOO

# 1998

# GSX Limited, 5629/5845

## Starter

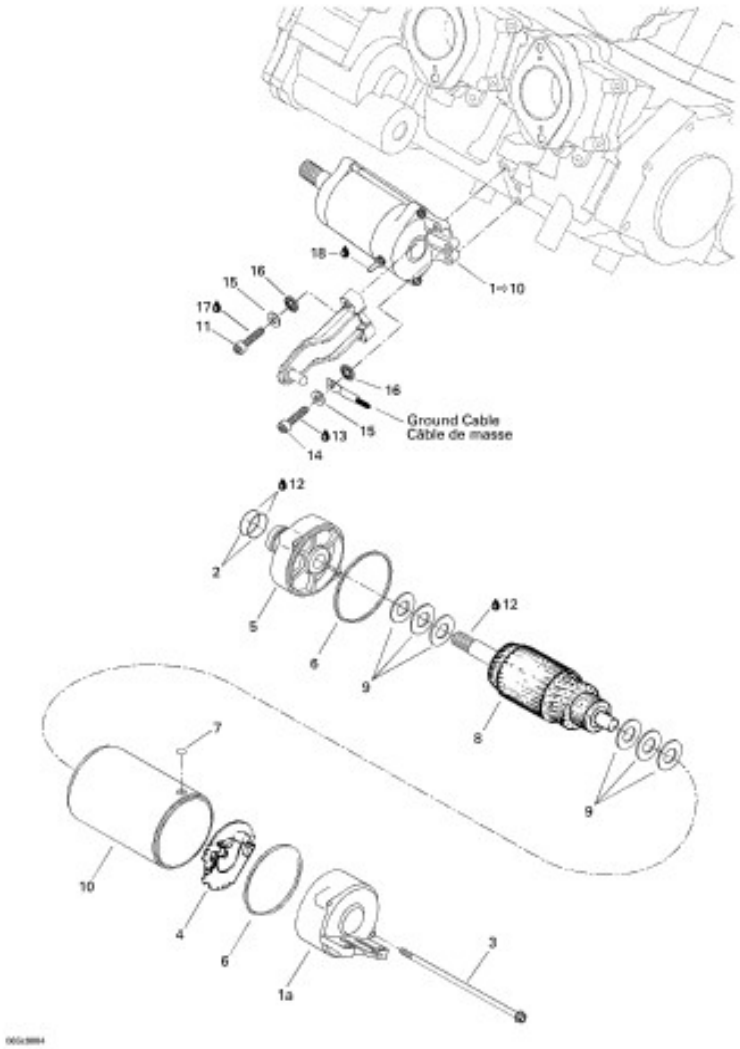


| | | |
|---|---|---|
| 1 | 278000987 | Starter Ass'y. Includes 1 - 10. |
| 1a | 278001156 | Rear Housing |
| 2 | 278001159 | O-Ring |
| 3 | 278001157 | Screw |
| 4 | 278001154 | Brush Holder |
| 5 | 278001152 | Front Housing |
| 6 | 278001158 | Square Ring |
| 7 | 278001160 | O-Ring |
| 8 | 278001155 | Armature |
| 9 | 278001161 | Set Washer |
| 10 | 278001153 | Starter Housing |
| 11 | 215963560 | Socket Head Screw M6 x 35 |
| 12 | 293550010 | Synthetic Grease, 400 gr |
| 13 | 293800005 | Loctite 271, 10 ml |
| 14 | 215961660 | Socket Head Screw M6 x 16 |
| 15 | 213200001 | Flat Washer 6 mm |
| 16 | 217161600 | Serrated Lock Washer 6 mm |
| 17 | 293800005 | Loctite 271, 10 ml |
| 18 | 293550004 | Dielectric Grease, 150 gr |

# SEADOO

# 1998

# GSX Limited, 5629/5845

## Drive System

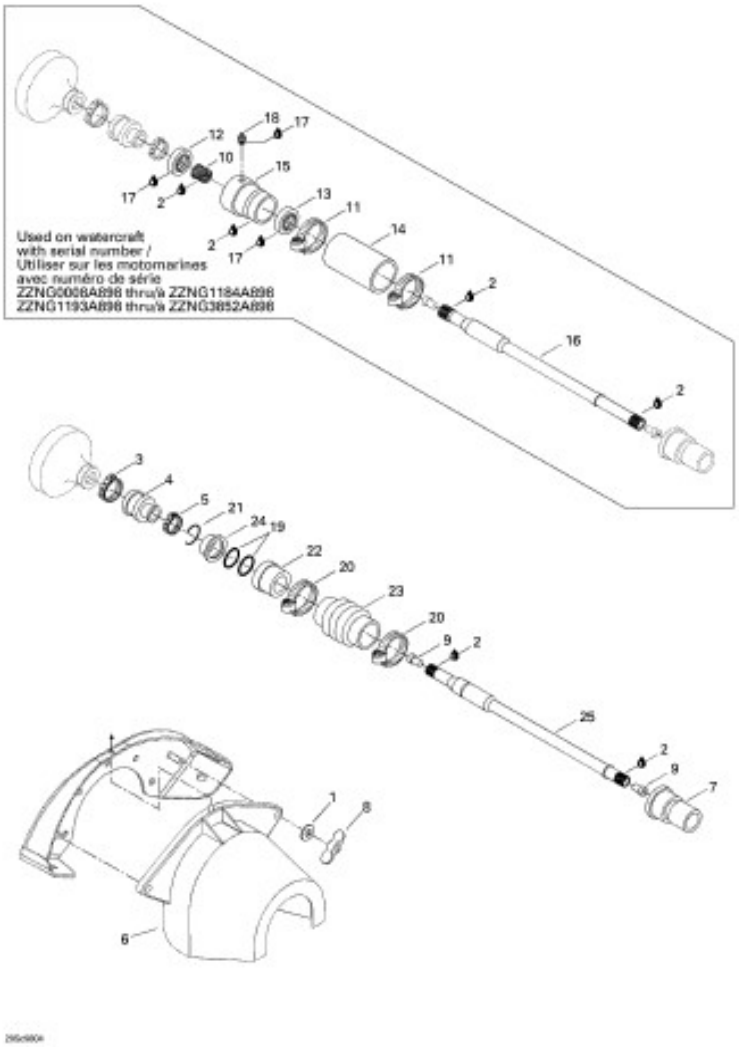


| | | |
|---|---|---|
| 1 | 213200011 | Flat Washer 8 mm |
| 2 | 293550010 | Synthetic Grease, 400 gr |
| 3 | 293650021 | Oetiker Clamp |
| 4 | 272000001 | Rubber Boot |
| 5 | 293650067 | Oetiker Clamp |
| 6 | 272000094 | Flywheel Guard |
| 7 | 292000075 | Hull Thru Fitting |
| 8 | 218681000 | Wing Nut M8 |
| 9 | 272000019 | Plug (Bumper) |
| 10 | | Used on watercraft with serial number. Includes 10 - 18. ZZNG0008A898 thru ZZNG1184A898. ZZNG1193A898 thru ZZNG3852A898 |
| 10 | 293350007 | Needle Bearing |
| 11 | 293650035 | Tridon Clamp |
| 12 | 293200025 | Double Lip Seal |
| 13 | 293200012 | Double Lip Seal |
| 14 | 271000881 | Protection Hose |
| 15 | 272000024 | Seal Carrier |
| 16 | 272000148 | Drive Shaft |
| 17 | 293800038 | Loctite 518, 50 ml |
| 18 | 293550008 | Grease Fitting |
| 19 | 293300032 | O-Ring |
| 20 | 293650040 | Tridon Clamp |
| 21 | 272000135 | "C" Clip |
| 22 | 272000042 | Ring Carbone |
| 23 | 272000041 | Protection Hose |
| 24 | 272000064 | Ring-Seal Carrier |
| 25 | 272000151 | Drive Shaft |

# SEADOO

# 1998

# GSX Limited, 5629/5845

## Propulsion System

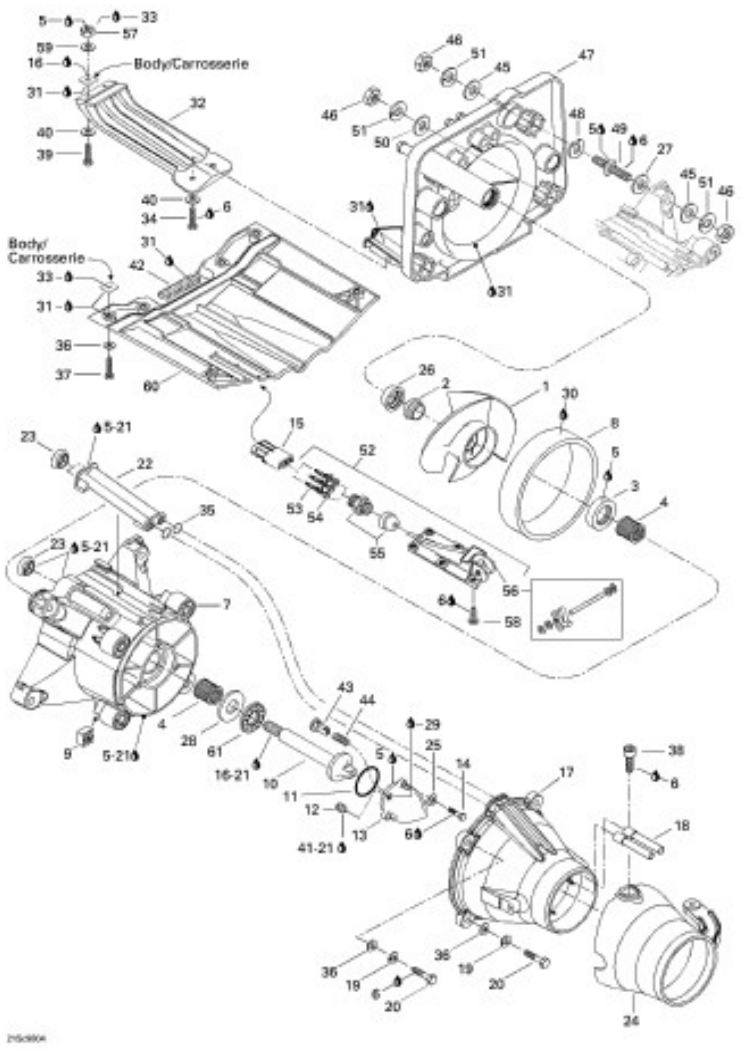


| | | |
|---|---|---|
| 1 | 271000905 | Stainless Steel Impeller Ass'y |
| | 271000931 | St. Steel Impeller Ass'y (High Altitude) |
| 2 | 271000516 | Impeller Boot |
| 3 | 293200025 | Double Lip Seal |
| 4 | 293350017 | Needle Bearing |
| 5 | 293800038 | Loctite 518, 50 ml |
| 6 | 293800015 | Loctite 242, 10 ml |
| 7 | 271000872 | Impeller Housing. Includes 7 - 9. |
| 8 | 271000904 | Wear-Ring |
| 9 | 211100033 | Square Nut |
| 10 | 271000886 | Impeller Shaft |
| 11 | 293250085 | O-Ring |
| 12 | 211500001 | Pipe Plug Socket 1/8-27 NPT |
| 13 | 271000874 | Impeller Cover |
| 14 | 215952060 | Socket Head Screw M5 x 20 |
| 15 | 278000281 | Female Housing (3 Ways)(Packard) |
| 16 | 293800005 | Loctite 271, 10 ml |
| 17 | 271000875 | Venturi Ass'y. Includes 17 - 18. |
| 18 | 271000338 | Siphon Tube |
| 19 | 213000001 | Lock-Washer 8 mm |
| 20 | 215684560 | Hex. Screw M8 x 45 |
| 21 | 293800041 | Primer Loctite |
| 22 | 271000785 | Water Outlet |
| 23 | 293250084 | Gasket |
| 24 | 271000806 | Steering Nozzle (Black) |
| 25 | 213200004 | Flat Washer 5 mm |
| 26 | 271000517 | Ring |
| 27 | 211200063 | Flat Washer |
| 28 | 293350020 | Thrust Washer |
| 29 | 293600011 | Synthetic Oil |
| 30 | 293800054 | Loctite 648, 50 ml |
| 31 | 293800053 | Sealant Right Stuff 26015, 7 oz |
| 32 | 271000790 | Pump Grate |
| 33 | 296000309 | Sealant Silicone, Clear |
| 34 | 215061660 | Hex. Screw M6 x 16 |
| 35 | 293300013 | O-Ring |
| 36 | 213200002 | Flat Washer 8 mm |
| 37 | 210000007 | Hex. Screw M8 x 30 |
| 38 | 211000127 | Socket Head Screw M8 x 10 |
| 39 | 210000014 | Hex. Screw M6 x 35 |
| 40 | 213200001 | Flat Washer 6 mm |
| 41 | 293800013 | Loctite 56765, Pipe Sealant, 250 ml |
| 42 | 293200003 | Seal |
| 43 | 271000898 | Pusher |
| 44 | 271000704 | Spring |
| 45 | 217002600 | Flat Washer 10 mm |
| 46 | 212100007 | Nut Hex. M10 |
| 47 | 271000866 | Pump Support |
| 48 | 272000053 | Shim |
| 49 | 271000693 | Stud |
| 50 | 213200003 | Flat Washer 10 mm |
| 51 | 213000003 | Lock Washer 10 mm |
| 52 | 278000849 | Speed Sensor. Includes 52 - 56. |
| 53 | 278000222 | Male Terminal (18 Gauge) |
| 54 | 278000218 | Wire Seal (16-18 Gauge-Green) |
| 55 | 293710031 | Electric Connector |
| 56 | 295500108 | Paddle Wheel Kit |
| 57 | 212000001 | Elastic Stop Nut M6 |
| 58 | 216351060 | Screw M5 x 10 |
| 59 | 213200007 | Flat Washer 6 mm |
| 60 | 271000756 | Riding Plate |
| 61 | 293350019 | Thrust Bearing |

# SEADOO

# 1998

# GSX Limited, 5629/5845

## Trim

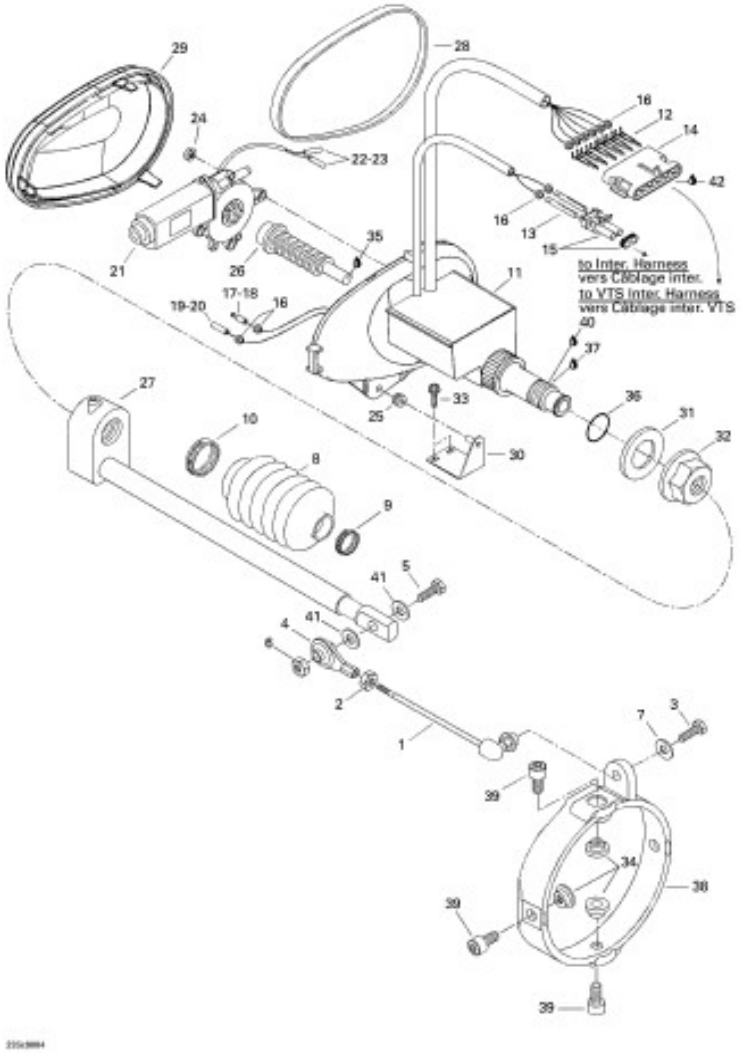


| | | |
|---|---|---|
| 1 | 271000758 | Moulding Rod |
| 2 | 212100005 | Nut |
| 3 | 211000074 | Screw M4 x 16 |
| 4 | 277000153 | Ball Joint |
| 5 | 215663560 | Hex. Screw M6 x 35 |
| 6 | 212000001 | Elastic Stop Nut M6 |
| 7 | 213200015 | Flat Washer 5 mm |
| 8 | 271000459 | Protector Hose |
| 9 | 293650082 | Daemar Clamp |
| 10 | 293650083 | Daemar Clamp |
| 11 | 278001121 | V.T.S Housing Ass'y. Includes 11 - 29. |
| 11 | 278001074 | V.T.S Housing Ass'y. Includes 11 - 20. |
| 12 | 278000222 | Male Terminal |
| 13 | 278000223 | Female Terminal |
| 14 | 278000156 | Female Housing (6 Ways)(Packard) |
| 15 | 278000220 | Male Housing (2 Ways)(Packard) |
| 16 | 278000218 | Wire Seal |
| 17 | 278000230 | Male Terminal |
| 18 | 278001008 | Insulation Sleeve(Yasaki) |
| 19 | 278001009 | Female Terminal (14 and 18 Gauge)(AMP) |
| 20 | 278001007 | Insulation Sleeve(Yasaki) |
| 21 | 278000616 | VTS Motor Ass'y. Includes 21 - 23. |
| 22 | 278000231 | Insulating Sheet |
| 23 | 278000230 | Male Terminal |
| 24 | 212000001 | Elastic Stop Nut M6 |
| 25 | 293720015 | Grommet |
| 26 | 278000428 | Worm Screw |
| 27 | 278000883 | Sliding Block |
| 28 | 293200027 | Gasket |
| 29 | 278000595 | V.T.S Cover |
| 30 | 292000250 | V.T.S Support Ass'y |
| 31 | 293830027 | Seal Washer |
| 32 | 211100020 | Special Nut M27 |
| 33 | 211000074 | Hex. Plastic Screw M4 x 16 |
| 34 | 293900007 | Venturi Bushing |
| 35 | 293550010 | Synthetic Grease, 400 g |
| 36 | 293300044 | O-Ring |
| 37 | 293800041 | Loctite - Primer N |
| 38 | 271000808 | Trimming Ring |
| 39 | 211000127 | Socket Head Screw M8 x 10 |
| 40 | 293800015 | Loctite 242, 10mL |
| 41 | 213200001 | Washer 6 mm |
| 42 | 293550004 | Dielectric Grease, 150 gr |

# SEADOO

# 1998

# GSX Limited, 5629/5845

## Steering System

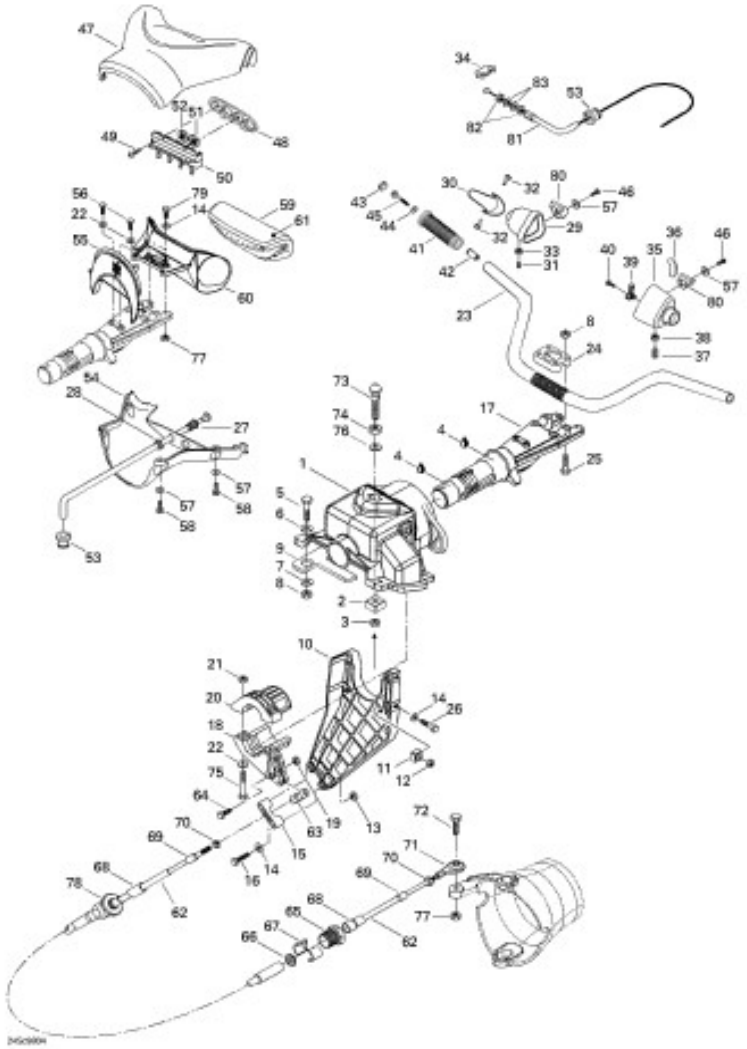

| | | |
|---|---|---|
| 1 | 277000645 | Steering Support. Includes 1 - 3. |
| 2 | 271000598 | Nut Housing. Includes 2 - 3. |
| 3 | 212000003 | Elastic Stop Nut |
| 4 | 293550010 | Synthetic Grease, 400gr |
| 5 | 210100013 | Hex. Screw M8 x 35 |
| 6 | 213200002 | Flat Washer 8 mm |
| 7 | 213200011 | Flat Washer 8 mm |
| 8 | 212000002 | Elastic Stop Nut M8 |
| 9 | 293250069 | Gasket |
| 10 | 277000516 | Cable Support. Includes 10 - 13. |
| 11 | 269500252 | Nut Housing. Includes 11 - 12. |
| 12 | 212000001 | Elastic Stop Nut M6 |
| 13 | 212000001 | Elastic Stop Nut M6 |
| 14 | 213200001 | Flat Washer 6 mm |
| 15 | 277000162 | Thrust Support |
| 16 | 215665060 | Hex. Screw M6 x 50 |
| 17 | 2.77001E+11 | Steering Stem |
| 18 | 277000518 | Steering Stem Arm Ass'y. Includes 18 - 19. |
| 19 | 212000001 | Elastic Stop Nut M6 |
| 20 | 277000519 | Thrust Arm. Includes 20 - 21. |
| 21 | 212000001 | Elastic Stop Nut M6 |
| 22 | 213200007 | Flat Washer 6 mm |
| 23 | 277000305 | Handle Bar |
| 24 | 277000142 | Steering Clamp |
| 25 | 215685060 | Hex. Screw M8 x 50 |
| 26 | 210000004 | Hex. Screw M6 x 20 |
| 27 | 270000383 | Choke Cable. Includes 27 - 28. |
| 28 | 211100030 | Hex. Nut |
| 29 | 277000285 | Throttle Handle Housing |
| 30 | 277000214 | Throttle Handle |
| 31 | 211000039 | Set Screw M6 x 12 |
| 32 | 277000381 | Pin |
| 33 | 212000001 | Elastic Stop Nut M6 |
| 34 | 277000279 | Lock Tab |
| 35 | 277000498 | L.H. Handle Housing. Includes 35 - 38. |
| 36 | 277000497 | V.T.S. Knob |
| 37 | 211000039 | Set Screw M6 x 12 |
| 38 | 212000001 | Elastic Stop Nut M6 |
| 39 | 277000219 | Retainer Plate |
| 40 | 211000032 | Tapping Screw |
| 41 | 295500110 | Handle Grip Kit (Black). Includes 41 - 45. |
| 42 | XXX | Grip Insert |
| 43 | 277000203 | Grip Cap |
| 44 | 213200007 | Flat Washer 6 mm |
| 45 | 211000031 | Screw M6 x 45 |
| 46 | 211100004 | Tapping Screw |
| 47 | 277000734 | Upper Steering Cover (Amethyst) |
| 48 | 277000688 | Retainer Plate |
| 49 | 211000028 | Screw K40 x 10 |
| 50 | 277000563 | Switch Support |

# SEADOO

# 1998

# GSX Limited, 5629/5845

## Steering System

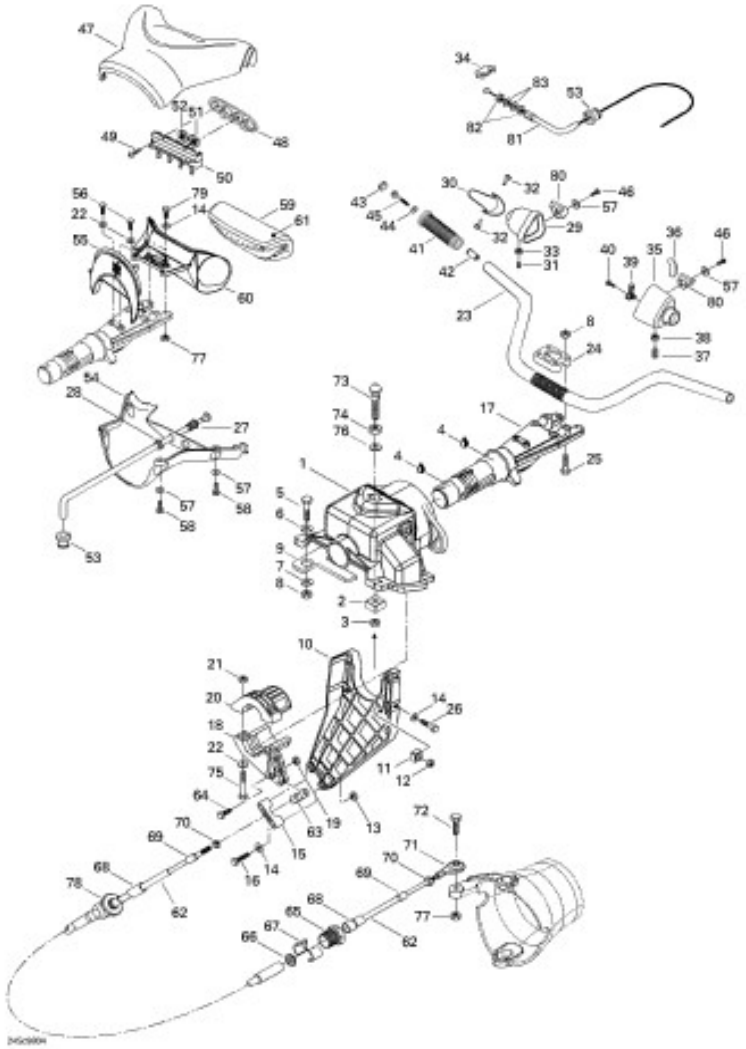

| | | |
|---|---|---|
| 51 | 293000079 | <> Knob |
| 52 | 293000080 | <> Knob |
| 53 | 293720046 | Grommet |
| 54 | 277000735 | Lower Steering Cover (Amethyst) |
| 55 | 277000549 | Plate |
| 56 | 211000036 | Tapping Screw |
| 57 | 213200004 | Flat Washer 5 mm |
| 58 | 211000033 | Screw K40 x 16 |
| 59 | 277000749 | Handle Pad Ass'y. Includes 59 - 61. |
| 60 | 277000687 | Pad Support |
| 61 | 277000750 | Steering Cover |
| 62 | 271000436 | Steering Cable |
| 63 | 277000646 | Joint |
| 64 | 211000081 | Hex. Screw M6 x 30 |
| 65 | 277000052 | Cable Lock |
| 66 | 211100009 | Rubber Washer |
| 67 | 277000055 | Half Ring |
| 68 | 277000473 | Large Boot |
| 69 | 277000466 | Small Boot |
| 70 | 212100005 | Nut 10-32 |
| 71 | 277000153 | Ball Joint |
| 72 | 215663560 | Hex. Screw M6 x 35 |
| 73 | 291000689 | Latch Stud |
| 74 | 218300600 | Hex. Jam Nut M10 |
| 75 | 210000005 | Hex. Screw M6 x 25 |
| 76 | 217002600 | Flat Washer 10 mm |
| 77 | 212000001 | Elastic Stop Nut M6 |
| 78 | 277000167 | Knob Adjuster |
| 79 | 210000006 | Hex. Screw M6 x 30 |
| 80 | 293450153 | Insert |
| 81 | 277000781 | Throttle Cable Ass'y. Includes 81 - 83. |
| 82 | 212100003 | Jam Nut M6 |
| 83 | 213200001 | Flat Washer M6 |

# SEADOO

# 1998

# GSX Limited, 5629/5845

## Seat And Engine Cover

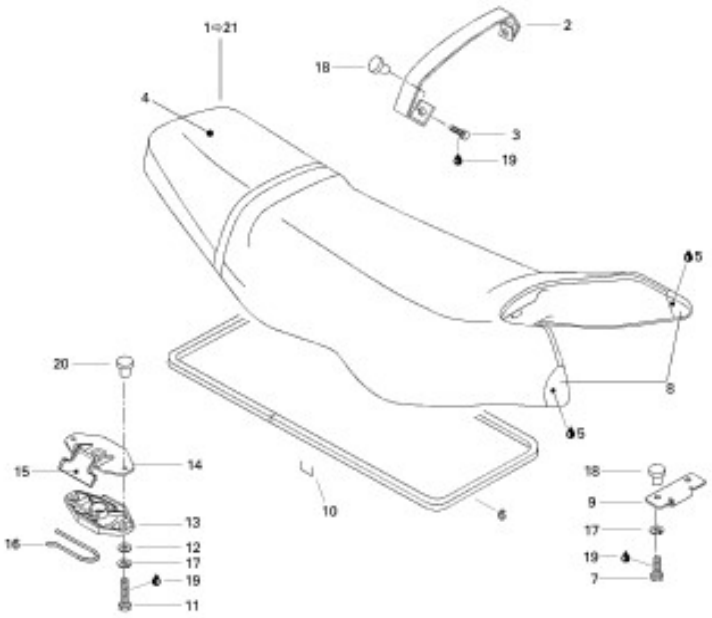


| | | |
|---|---|---|
| 1 | 269000453 | Seat Ass'y (Amethyst). Includes 1 - 21. |
| 2 | 269000492 | Seat Strap |
| 3 | 210100007 | Socket Head Screw M6 x 10 |
| 4 | 269000491 | Seat Cover with Foam |
| 5 | 413705800 | Loctite 414, 29.5 c.c |
| 6 | 293200017 | <> Neoprene Seal |
| 7 | 215061660 | Hex. Screw M6 x 16 |
| 8 | 269000455 | R.H. Corner Seat |
| | 269000465 | L.H. Corner Seat |
| 9 | 291000174 | Base Keeper |
| 10 | 293730005 | Staples (Seat Cover) |
| 11 | 210000005 | Hex. Screw M6 x 25 |
| 12 | 213200001 | Washer 6 mm |
| 13 | 269000015 | Latch Base |
| 14 | 269700020 | Latch Cover |
| 15 | 269000016 | Latch Lever |
| 16 | 269700017 | Spring |
| 17 | 217361500 | Lock Washer 6mm |
| 18 | 211100035 | Threaded Insert |
| 19 | 293800015 | Loctite 242, 10 ml |
| 20 | 211100038 | "T" Shape Nut |

# SEADOO

# 1998

# GSX Limited, 5629/5845

# Front Storage Compartment

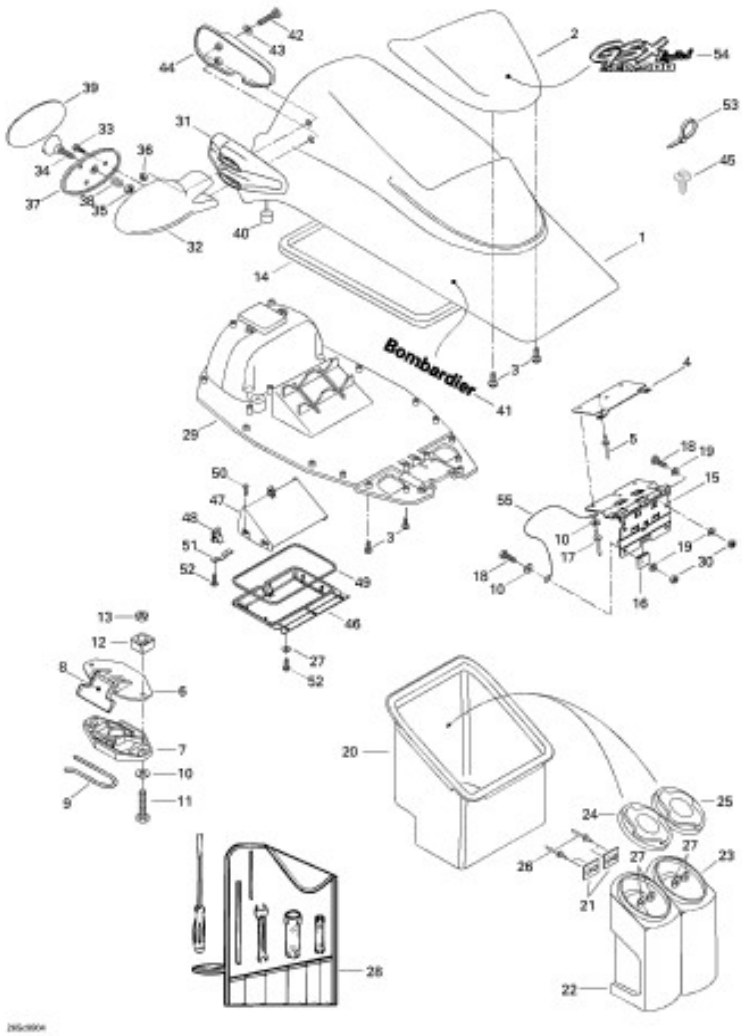


| | | |
|---|---|---|
| 1 | 269500485 | Storage Cover Upper (Amethyst) |
| 2 | 269500316 | Deflector (Viper Red) |
| 3 | 211000111 | Screw for Plastic K40 x 13 |
| 4 | 269500280 | Retainer Plate |
| 5 | 293150039 | Rivet (3/16) |
| 6 | 269700020 | Latch Cover |
| 7 | 269000015 | Latch Base |
| 8 | 269000016 | Latch Lever |
| 9 | 269700017 | Spring |
| 10 | 213200001 | Flat Washer 6 mm |
| 11 | 210000006 | Hex. Screw M6 x 30 |
| 12 | 269500252 | Nut Housing. Includes 12 - 13. |
| 13 | 212000001 | Elastic Stop Nut M6 |
| 14 | 293200017 | Seal |
| 15 | 269500522 | Hinge |
| 16 | 293830046 | Protector Cap |
| 17 | 293150039 | Rivet (3/16) |
| 18 | 211000018 | Screw M6 x 20 |
| 19 | 213200007 | Flat Washer 6 mm |
| 20 | 269500286 | Storage Tray |
| 21 | 293250037 | Gasket |
| 22 | 269500151 | Extinguisher Storage Housing |
| 23 | 269500180 | Storage Housing |
| 24 | 269500236 | Extinguisher Storage Housing Cap |
| 25 | 269500237 | Storage Housing Cap |
| 26 | 293150032 | Pop Rivet (1/8) |
| 27 | 213200018 | Flat Washer 3 mm |
| 28 | 295000066 | Tool Kit |
| 29 | 269500520 | Lower Storage Cover |
| 30 | 212000001 | Elastic Stop Nut M6 |
| 31 | 269500380 | Support (Mirror) RH |
| | 269500379 | Support (Mirror) LH |
| 32 | 269500382 | Mirror RH Ass'y (Viper Red). Includes 32 - 39. |
| | 269500381 | Mirror LH Ass'y (Viper Red) |
| 33 | 211000033 | Screw K40 x 16 |
| 34 | 269500079 | Ball Joint |
| 35 | 212000001 | Elastic Stop Nut M6 |
| 36 | 212100001 | Nut M8 |
| 37 | XXX | Housing Support |
| 38 | 269500453 | Spring |
| 39 | 269500454 | Mirror |
| 40 | 293830005 | Rubber Plug |
| 41 | 219900975 | <> Decal |
| 42 | 211000129 | Hex Screw M8 x 140 |
| 43 | 213200002 | Flat Washer 8 mm |
| 44 | 269500383 | Spacer RH |
| | 269500384 | Spacer LH |
| 45 | 293730018 | Dart |
| 46 | 269500517 | Glove Box Inferior |
| 47 | 269500519 | Glove Box Upper |
| 48 | 269500481 | Latch |
| 49 | 293250083 | Gasket |
| 50 | 211000153 | Screw KA30 x 12 |
| 51 | 269500518 | Retainer Plate |
| 52 | 211000153 | Screw KA30 x 12 |
| 53 | 294000606 | Tie Rap 180 mm |
| 54 | 219901054 | <> Identification Decal |
| 55 | 269500524 | Retaining Cable |

# SEADOO

# 1998

# GSX Limited, 5629/5845

## Body

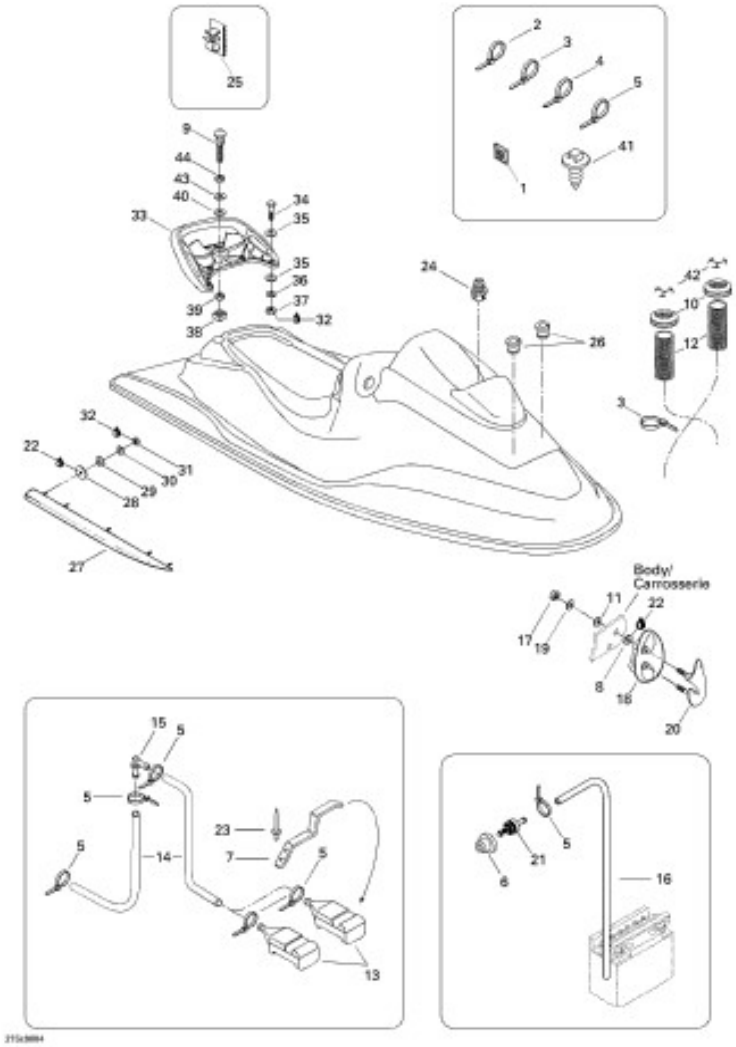


| | | |
|---|---|---|
| 1 | 293750015 | Tie Rap Mount |
| 2 | 294000606 | Tie Rap 180 mm |
| 3 | 293750008 | Tie Rap 350 mm |
| 4 | 293750002 | Tie Rap 130 mm |
| 5 | 293750001 | Tie Rap 94 mm |
| 6 | 293720029 | Grommet |
| 7 | 292000398 | L.H. Spring Clip |
| 8 | 213200002 | Flat Washer 8 mm |
| 9 | 291000691 | Seat Stud |
| 10 | 293720036 | Grommet |
| 11 | 293830037 | Rubber Washer |
| 12 | 291000870 | Vent Tube |
| 13 | 292000079 | Screen Bailer |
| 14 | 275000007 | Hose 8 mm |
| 15 | 293710057 | Elbow Fitting 90 Deg |
| 16 | 275500018 | Hose Vent 6 mm |
| 17 | 212000002 | Elastic Stop Nut M8 |
| 18 | 292000501 | Shell (Viper Red) |
| 19 | 213200011 | Washer 8 mm |
| 20 | 292000500 | Eye-Bow (Viper Red) |
| 21 | 275500167 | Check Valve |
| 22 | 296000309 | Sealant Silicone, Clear |
| 23 | 293150037 | Rivet 3/16 |
| 24 | 293720042 | Grommet |
| 25 | 293750005 | Tie-Clamp |
| 26 | 293720046 | Grommet |
| 27 | 292000491 | R.H. Sponson |
| | 292000492 | L.H. Sponson |
| 28 | 293250026 | Gasket |
| 29 | 213200007 | Washer 6 mm |
| 30 | 217361500 | Washer Lock 6 mm |
| 31 | 212100004 | Nut M6 |
| 32 | 293800015 | Loctite 242, 10ml |
| 33 | 295500583 | Grab Handle Kit (Amethyst). Includes 33 - 37. |
| 34 | 215664060 | Hex. Screw M6 x 40 |
| 35 | 213200007 | Flat Washer 6 mm |
| 36 | 217361500 | Lock Washer 6 mm |
| 37 | 212100004 | Elastic Stop Nut M6 |
| 38 | 271000598 | Nut Housing. Includes 38 - 39. |
| 39 | 212000003 | Elastic Stop Nut M10 |
| 40 | 291000628 | Rubber Washer |
| 41 | 293730018 | Dart |
| 42 | 291001098 | Restrictor |
| 43 | 217002600 | Washer 10 mm |
| 44 | 218300600 | Jam Nut M10 |

# SEADOO

# 1998

# GSX Limited, 5629/5845

## Body

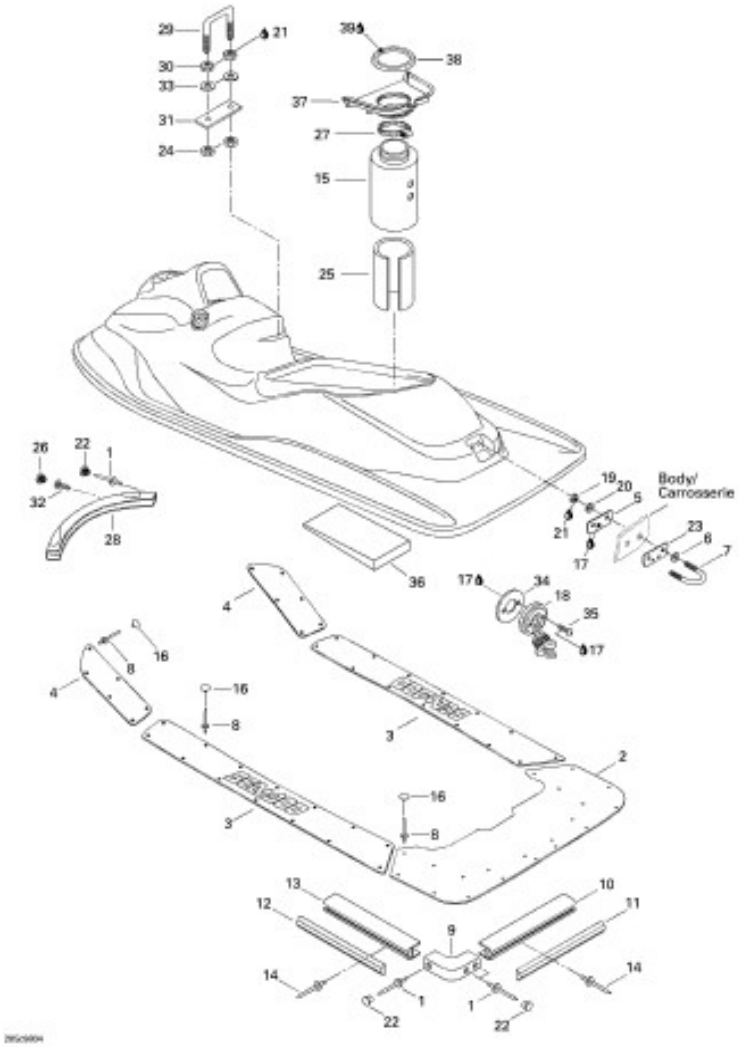


| | | |
|---|---|---|
| 1 | 293150013 | Rivet 3/16 x 1.190 |
| 2 | 291001185 | Rear Carpet (Black) |
| 3 | 291001183 | R.H. Lateral Carpet (Black) |
| | 291001184 | LH Lateral Carpet (Black) |
| 4 | 291000511 | R.H. Front Carpet (Black) |
| | 291000512 | LH Front Carpet (Black) |
| 5 | 291000307 | Retainer Plate |
| 6 | 293050001 | Washer 8 mm |
| 7 | 292000011 | <> Clamp |
| 8 | 293150036 | Pop Rivet 1/8 x .765 |
| 9 | 291001182 | Bumper Corner (Amethyst) |
| 10 | 291001180 | Rear Bumper (Amethyst) |
| 11 | 291001181 | Rear Bumper Trim (Amethyst) |
| 12 | 291001179 | Side Bumper Trim (Amethyst) |
| 13 | 291001178 | Side Bumper (Amethyst) |
| 14 | 293150014 | Pop Rivet 3/16 x .940 |
| 15 | 291001103 | Rear Vent Hose |
| 16 | 293000014 | Cap (Black) |
| 17 | 296000309 | Sealant Silicone, Clear |
| 18 | 292000187 | Drain Plug |
| 19 | 212100001 | Nut M8 |
| 20 | 213000001 | Lock Washer 8 mm |
| 21 | 293800005 | Loctite 271, 10mL |
| 22 | 293000073 | Bumper Plug (Amethyst) |
| 23 | 291001295 | Finition Plate (Amethyst) |
| 24 | 212000001 | Elastic Stop Nut M6 |
| 25 | 291000400 | Noise Deflector |
| 26 | 293000072 | Bumper Plug (Amethyst) |
| 27 | 293650054 | Tridon Clamp |
| 28 | 291001176 | Nose Bumper (Amethyst) |
| 29 | 291000468 | Hook |
| 30 | 212100004 | Nut M6 |
| 31 | 291000079 | Reinforcement Plate |
| 32 | 211000037 | Screw |
| 33 | 213200007 | Washer 6 mm |
| 34 | 293250030 | Gasket |
| 35 | 211000021 | Screw 10 - 14 x 5/8 |
| 36 | 292000469 | Float L.H |
| 37 | 291001150 | Hose Support Ass'y. Includes 37 - 38. |
| 37 | 291001105 | Hose Vent Adaptor |
| 38 | 293200017 | Neoprene Seal |
| 39 | 413705800 | Loctite 414, 29.5 c.c |

# SEADOO

# 1998

# GSX Limited, 5629/5845

## Decals

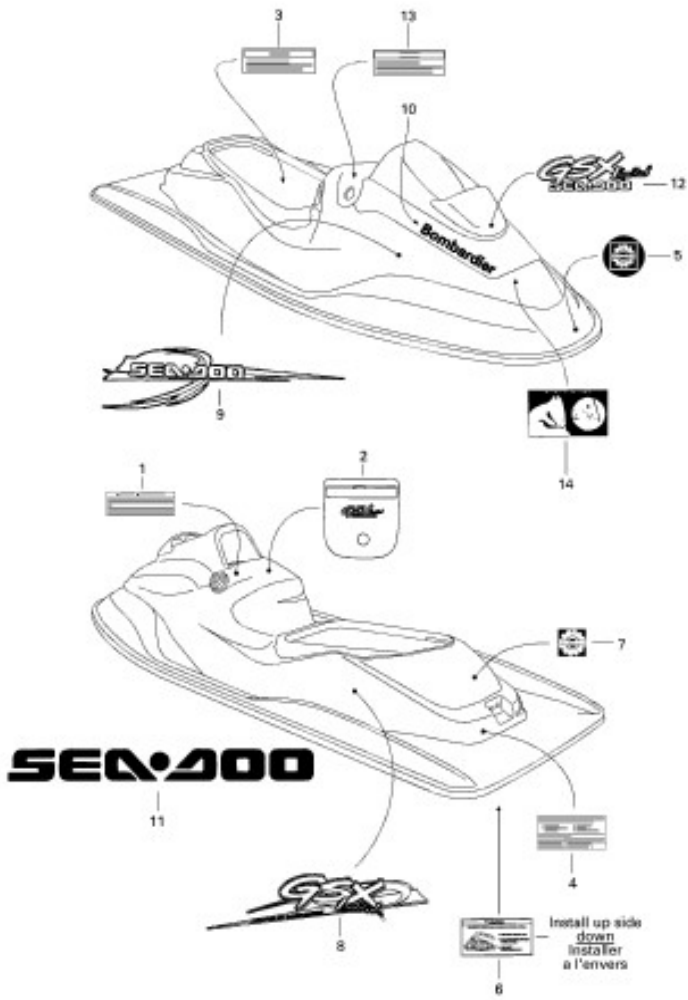


| | | |
|---|---|---|
| 1 | 219900177 | <> Decal |
| 2 | 219901053 | Dash Decal |
| 3 | 219900965 | Warning Decal (Battery) |
| 4 | 219900656 | <> Decal |
| 5 | 415037800 | <> Logo |
| 6 | 219900934 | <> Decal |
| 7 | 219900049 | <> Logo Decal |
| 8 | 219901052 | R.H. Lateral Rear Decal |
| | 219901051 | L.H. Lateral Rear Decal |
| 9 | 219901050 | R.H. Lateral Front Decal |
| | 219901049 | L.H. Lateral Front Decal |
| 10 | 219900975 | <> Decal |
| 11 | 219901056 | Hull Decal (White) |
| 12 | 219901054 | <> Identification Decal |
| 13 | 219900941 | Warning Decal (Oil) |
| 14 | 219900795 | Instruction Decal |

# SEADOO

# 1998

# GSX Limited, 5629/5845

## Accessories

No Diagram Available

Parts List Only

| | | |
|---|---|---|
| 1 | 295500575 | Bilge Pump Kit (SPX, GTS 1998) |
| | 295500586 | Bilge Pump Kit. (GS, GSX LTD, GTX, GTI, GTX LTD 1998) |
| | 295500471 | Bilge Pump Kit. (SP, SPX, GTS, GTX, HX 1997) |
| | 295500472 | Bilge Pump Kit. (GS, GSI, GSX/LIMITED, XP, GTI 97) |
| 2 | 295500553 | Horn (All Models) |
| 3 | 298551074 | SPX Polyester Cover (Teal) |
| | 298551075 | SPX Personalized Cover (Teal) |
| | 298124076 | Sunfast Cover (Red) |
| | 298124075 | Sunfast Cover Personalized SPX |
| | 298785074 | Polyester Cover (Teal). (GS, GSI, GSX, GSX LTD 97) |
| | 298785075 | Personalized Cover (Teal). (GS, GSI, GSX, GSX LTD 97) |
| | 298126076 | Cover (Red) (GS, GSI, GSX, GSX LTD 98) |
| | 298126075 | Personalized Cover (Red). (GS, GSI, GSX, GSX LTD 98) |
| 4 | 295500327 | Countour Racing Seat-Yellow. (XP 96 / SPX 97-98) |
| 5 | 295500258 | Coupler Hose |
| 6 | 295500225 | Decal For Trailer (Teal) |
| 7 | 295500226 | Decal For Trailer (Yellow) |
| 8 | 295500227 | Decal For Trailer (Rhodamine) |
| 9 | 295100047 | Dock Ties 4' |
| 10 | 292000187 | Drain Plug |
| 11 | 295500511 | Fender for PWC |
| 12 | 295500510 | Fender Hooks |
| 13 | 295100007 | First Aid Kit |
| 14 | 295100004 | Fire Extinguisher U.S. (Red) |
| | 295100056 | Fire Extinguisher U.S. (White) |
| 15 | 295100005 | Fire Extinguisher Can. (Red) |
| 16 | 295500068 | Flush Kit (SP, GTS 97-98) |
| 17 | 295500473 | Flush Kit Adaptor. (All 97-98 Except SP, GTS) |
| 18 | 295500496 | Fuel Gauge/Low Oil Indicator Kit (56 mm). (SP 97) |
| 19 | 295500590 | Gelcoat Repair Kit. (All Models 98 Except GTX) |
| 19 | 295500430 | Gelcoat Repair Kit. (All Models 97, GTX 98) |
| 20 | 295500466 | Infocenter Accessories Kit. (GSI, GSX 97) |
| | 295500592 | Infocenter External Temperature. (GSX LTD 98) |
| 21 | 295500315 | Jet Power Paddle |
| 22 | 295500453 | Kneeboard |
| | 295500551 | Kneeboard |
| 23 | 295500463 | LCD Gauge Kit. (HX 97, SPX, GTS 97-98) |
| | 295500464 | LCD Gauge Kit. (SP 97) |
| 24 | 295100044 | Lift Kit (XP 97, All 98) |
| | 295100043 | Lift Kit (All 97 Models Except XP) |
| 25 | 295500524 | Manual VTS (SP 97, GS 97-98) |
| 26 | 295500282 | R.H. Mirror White (GT 90-95 / GTS 97-98) |
| | 295500380 | R.H. Mirror (96, 97 SP) |
| | 295500530 | R.H. Mirror Yellow (GS 98) |
| | 295500617 | R.H. Mirror Amethyst (GSI, GSX LTD 98) |
| 27 | 295500283 | LH Mirror White (GT 90-95 / GTS 97-98) |
| | 295500333 | LH Mirror (96, 97 SP) |
| | 295500531 | LH Mirror Yellow (GS 98) |
| | 295500616 | LH Mirror Amethyst (GSI, GSX LTD 98) |

# SEADOO

# 1998

# GSX Limited, 5629/5845

## Accessories

No Diagram Available

Parts List Only

| | | |
|---|---|---|
| 55 | 295500498 | Ski Rope (5 Sections) |
| 56 | 295500595 | Laser Stick |

| | | |
|---|---|---|
| 28 | 295100008 | Mooring Rope |
| | 295100100 | Mooring Rope (All Models 98) |
| 29 | 295500336 | Plate Stabilizer Kit (SP, SPI 96 / SP 97) |
| 30 | 295500444 | Safety Landyard for D.E.S.S |
| | 295500341 | Safety Landyard |
| 31 | 295500451 | Sand Bag Anchor (All Models) |
| | 295500589 | Sand Bag Anchor Red (All Models) |
| 32 | 295500214 | Shock Tube Kit |
| | 295500597 | Shock Tube Kit (Red) |
| 33 | 295500498 | Ski Tow Rope |
| 34 | 295500108 | Paddlewheel Kit |
| 35 | 295500457 | Speedometer Kit (SP 97, SPX 97-98) |
| | 295500458 | Speedometer Kit (GTS 97-98) |
| | 295500462 | Speedometer Kit (GS 97-98, GSI 97) |
| 36 | 295500150 | Storage Tray. (GT Series and 97 GTS) |
| 37 | 295100006 | Survival Kit |
| 38 | 295500459 | Tachometer (56 mm). (HX 97, SP 97, GTS 97-98, SPX 98) |
| | 295500460 | Tachometer (56 mm). (XP 97) |
| 39 | 295500218 | Telescopic Paddle |
| 40 | 295100010 | Tie-Down (Cam Buckle)-Purple |
| | 295100103 | Tie-Down (Cam Buckle)-Red |
| | 295100011 | Tie-Down (Ratchet Buckle)-Purple |
| | 295100104 | Tie-Down (Ratchet Buckle)-Red |
| 41 | 295500148 | Touring Seat Kit (Violet). (GTS, GTX 94-95 / 97 GTS) |
| | 295500323 | Touring Seat Kit (Yellow). (GTI, GTS 96 / 97-98 GTS) |
| 42 | 295500591 | Tilt Steering (GTX, GTX LTD 98) |
| 43 | 295500316 | Wakeboard |
| | 295500552 | Wakeboard |
| | 295500600 | Pro Wakeboard |
| 44 | 295500497 | Wakeboard Handle |
| | 295500601 | Wakeboard Handle |
| 45 | 295500602 | Wakeboard Holder |
| 46 | 295500488 | Latch Kit (Front Storage). (SPX, GSX LTD, GTX, XP LTD, GTI, GTX LTD 98) |
| | 295500543 | Latch Kit (Front Storage). (GS, GTS 98) |
| 47 | 295500544 | Engine Compartment Light |
| 48 | 295500554 | Wistle |
| 49 | 295500221 | Windows Graphics-Sea-Doo Watercrafts |
| 50 | 295500223 | Windows Graphics-Team Sea-Doo |
| 51 | 295500222 | Windows Graphics-Team Sea-Doo US/CAN |
| 52 | 295500593 | Ladder 1 Step. (GTX, GTI, GTX LTD 98) |
| 53 | 295500219 | Trainer Skis |
| | 295500452 | Combo Skis Kit |
| | 295500547 | Combo Skis Kit |
| 53 | 295500548 | Combo Skis Kit |
| | 295500546 | Fat Skis Kit |
| | 295500495 | Slalom Ski L/XL |
| | 295500450 | Slalom Ski S/M |
| | 295500549 | Slalom Ski XS/S |
| | 295500550 | Slalom Ski M/XL |
| 54 | 295500598 | Ski Eye |

# SEADOO

# 1998

# GSX Limited, 5629/5845

# Typical Electrical Connections

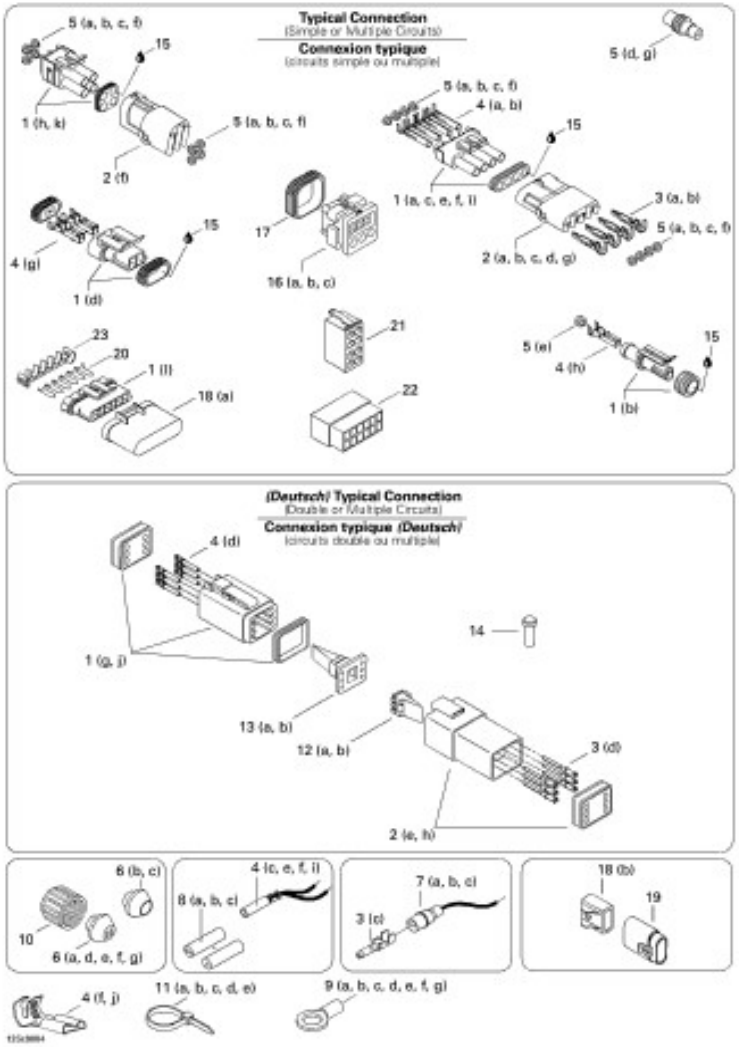


| | | |
|---|---|---|
| 1A | 278000219 | Male Housing (1 Circuit)(Packard) |
| 1B | 278001012 | Male Housing (1 Circuit)(AMP) |
| 1C | 278000220 | Male Housing (2 Circuits)(Packard) |
| 1D | 278001113 | Male Housing (2 Circuits) |
| 1E | 278000273 | Male Housing (3 Circuits)(Packard) |
| 1F | 278000395 | Male Housing (4 Circuits)(Packard) |
| 1G | 278000739 | Male Housing (4 Circuits)(Deutsch) |
| 1H | 278000891 | Male Housing (4 Circuits) |
| 1I | 278000221 | Male Housing (6 Circuits)(Packard) |
| 1J | 278000736 | Male Housing (6 Circuits)(Deutsch) |
| 1K | 278001318 | Male Housing (6 Circuits) (AMP) |
| 1L | 278001327 | Male Housing (6 Circuits) (Packard) |
| 2A | 278000161 | Female Housing (1 Circuit)(Packard) |
| 2B | 278000217 | Female Housing (2 Circuits)(Packard) |
| 2C | 278000281 | Female Housing (3 Circuits)(Packard) |
| 2D | 278000394 | Female Housing (4 Circuits)(Packard) |
| 2E | 278000635 | Female Housing (4 Circuits)(Deutsch) |
| 2F | 278000890 | Female Housing (4 Circuits) |
| 2G | 278000156 | Female Housing (6 Circuits)(Packard) |
| 2H | 270000137 | Female Housing (6 Circuits)(Deutsch) |
| 3A | 409004300 | Male Terminal (16 Gauge)(Packard) |
| 3B | 278000222 | Male Terminal (18 Gauge)(Packard) |
| 3C | 278000230 | Male Terminal (20 Gauge)(AMP) |
| 3D | 278000631 | Male Terminal (16-18 Gauge)(Deutsch) |
| 4A | 409007300 | Female Terminal (16 Gauge)(Packard) |
| 4B | 278000223 | Female Terminal (18 Gauge)(Packard) |
| 4C | 278001009 | Female Terminal (14-18 Gauge)(AMP) |
| 4D | 278000632 | Female Terminal (16-18 Gauge)(Deutsch) |
| 4E | 290964068 | Female Terminal (14-18 Gauge)(AMP) |
| 4F | 278000228 | Female Terminal (12-18 Gauge)(AMP) |
| 4G | 278001114 | Female Terminal |
| 4H | 278001014 | Female Terminal |
| 4I | 278000995 | Female Terminal(AMP) |
| 4J | 278000994 | Female Terminal(AMP) |
| 5A | 278000218 | Wire Seal (16-18 Gauge) (Green)(Packard) |
| 5B | 278000585 | Wire Seal (20 Gauge) (Purple)(Packard) |
| 5C | 278001065 | Wire Seal (20 Gauge) |
| 5D | 278000216 | Wire Seal (Cap) |
| 5E | 278001013 | Wire Seal (Yellow) |
| 5F | 278000996 | Wire Seal |
| 5G | 293000070 | Sealing Cap |
| 6A | 293720030 | Grommet (1 Circuit) (Blue) |
| 6B | 278000098 | Grommet (1 Circuit) (Black) |
| 6C | 278000682 | Grommet (1 Circuit) (Light Gray) |
| 6D | 293720025 | Grommet (2 Circuit) (Gray) |
| 6E | 278000193 | Grommet (3 Circuit) (Black) |
| 6F | 570026800 | Grommet (4 Circuit) (Red) |
| 6G | 293720034 | Grommet (4 Circuit) (White) |
| 7A | 278000231 | Insulating Sheath (Male Terminal) |
| 7B | 278001008 | Insulating Sheath (Male Terminal) |

# SEADOO

# 1998

# GSX Limited, 5629/5845

# Typical Electrical Connections

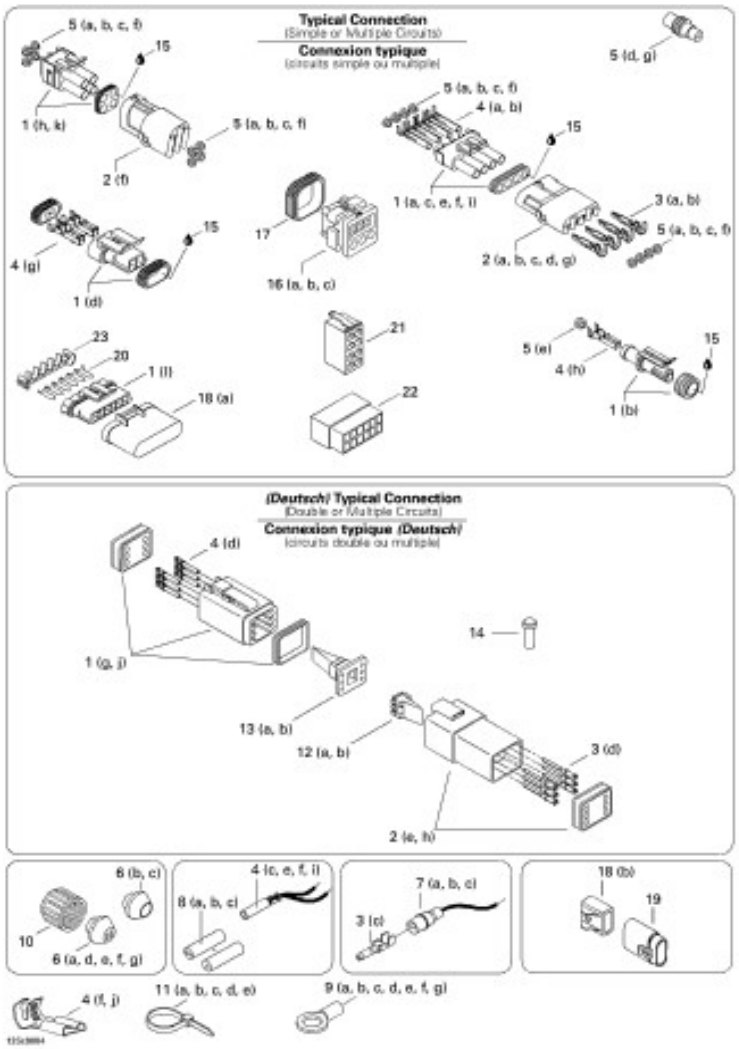


| | | |
|---|---|---|
| 7C | 290964077 | Insulating Sheath (Male Terminal) |
| 8A | 278001007 | Insulating Sheath (Simple) (Female Terminal) |
| 8B | 290964072 | Insulating Sheath (Simple) (Female Terminal) |
| 8C | 278000770 | Insulating Sheath (Double) (Female Terminal) |
| 9A | 278000992 | Open Barrel 1/4" (14-18 Gauge)(AMP) |
| 9B | 409003200 | Open Barrel(Essex) |
| 9C | 278000300 | Open Barrel(AMP) |
| 9D | 278001138 | Open Barrel(8 mm) |
| 9E | 278001165 | Open Barrel |
| 9F | 278001323 | Open Barrel (AMP) |
| 9G | 278001324 | Open Barrel (AMP) |
| 10 | 278000100 | Electric Box Cap |
| 11A | 293750001 | Tie Rap(94 mm) (Dennison) |
| 11B | 293750002 | Locking Tie 142 mm |
| 11C | 294000606 | Tie Rap(180 mm) (Panduit) |
| 11D | 293750009 | Tie Rap(155 mm) (Panduit) |
| 11E | 293750008 | Tie Rap(350 mm) (Dennison) |
| 12A | 278000738 | (Male) Secondary Lock (4 Circuits)(Deutsch) |
| 12B | 278000737 | (Female) Secondary Lock (6 Circuits) (Deutsch) |
| 13A | 278000636 | (Female) Secondary Lock (4 Circuits) (Deutsch) |
| 13B | 278000735 | (Female) Secondary Lock (6 Circuits) (Deutsch) |
| 14 | 293000052 | Sealing Cap(Deutsch) |
| 15 | 293550004 | Dielectric Grease, 150gr |
| 16A | 278000993 | Male Housing (26 Circuits) (AMP). Includes 16A - 17. |
| 16B | 278001062 | Male Housing (26 Circuits) (AMP) |
| 16C | 278001063 | Male Housing (26 Circuits) (AMP) |
| 17 | 278001307 | Wire Seal (AMP) |
| 18A | 278001330 | Cap (6 Circuits) |
| 18B | 278001326 | Fuse Holder Cap |
| 19 | 278001325 | Fuse Holder |
| 20 | 278001329 | Buss Bar |
| 21 | 278001321 | Male Housing (8 Circuits) (Carlington) |
| 22 | 278001322 | Male Housing (12 Circuits) (AMP) |
| 23 | 278001328 | Secondary Lock |

# SEADOO

# 1998

# GSX Limited, 5629/5845

## Electronic Module And Electrical Accessories

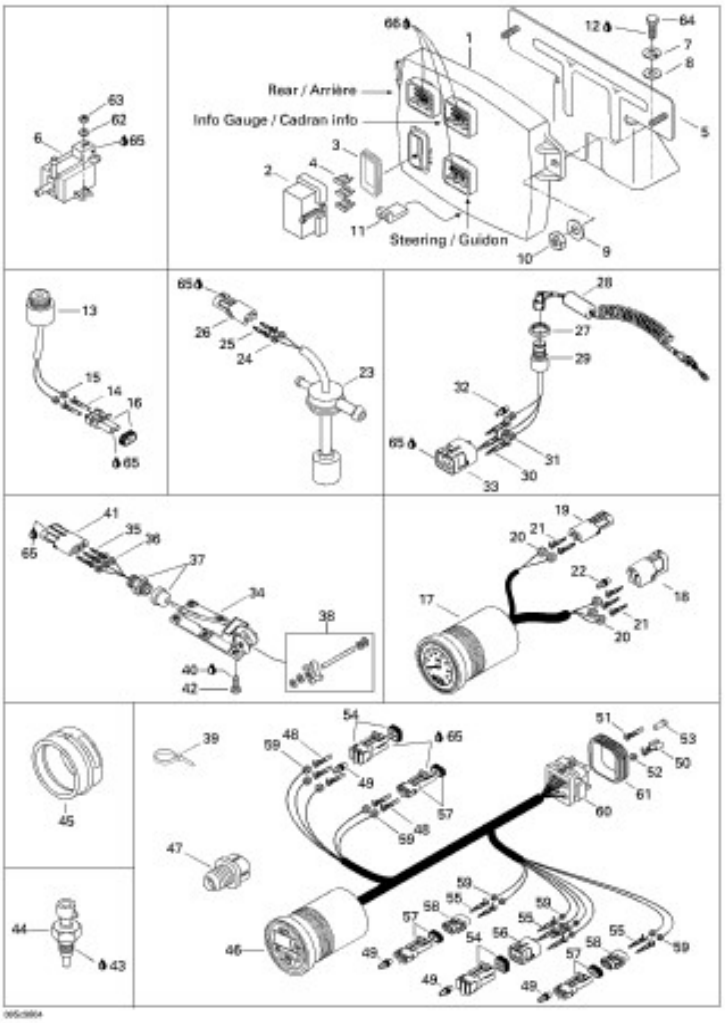


| | | |
|---|---|---|
| 1 | 278001343 | Electronic Module Ass'y. Includes 1 - 4. |
| 2 | 278001069 | Fuse Holder |
| 3 | 278001070 | Seal |
| 4 | 278000343 | Fuse 15 Amp |
| | 278000704 | Fuse 7.5 Amp |
| | 278000344 | Fuse 5 Amp |
| 5 | 278001131 | Box Support Ass'y |
| 6 | 270600005 | Solenoid Valve |
| 7 | 211200043 | Lock Washer |
| 8 | 213200015 | Washer 5 mm |
| 9 | 213200001 | Flat Washer 6 mm |
| 10 | 212000001 | Elastic Stop Nut M6 |
| 11 | 278001166 | Module Protector |
| 12 | 293800005 | Loctite 271, 10 ml |
| 13 | 278000978 | Buzzer Ass'y. Includes 13 - 16. |
| 14 | 278000223 | Female Terminal (18 Gauge) |
| 15 | 278000218 | Wire Seal (16 and 18 gauge - green) |
| 16 | 278000220 | Male Housing (2 Ways) |
| 17 | 278000947 | Speedometer. Includes 17 - 22. |
| 18 | 278000890 | Female Housing (4 Ways)(Packard) |
| 19 | 278000217 | Female Housing (2 Ways) |
| 20 | 278001065 | Wire Seal(Packard) |
| 21 | 278000222 | Male Terminal (18 Gauge) |
| 22 | 278000216 | Wire Seal (Cap)(Packard) |
| 23 | 278001315 | Oil sensor. Includes 23 - 26. |
| 24 | 278000218 | Wire Seal (16 and 18 gauge - green) |
| 25 | 278000222 | Male Terminal (18 Gauge) |
| 26 | 278000217 | Female Housing (2 Ways) |
| 27 | 278000508 | Safety Switch Nut |
| 28 | 295500444 | Safety Landyard Ass'y |
| 29 | 278000977 | Safety Switch. Includes 29 - 33. |
| 30 | 278000222 | Male Terminal (18 Gauge) |
| 31 | 278000218 | Wire Seal (16 and 18 gauge - green) |
| 32 | 278000216 | Wire Seal (Cap)(Packard) |
| 33 | 278000890 | Female Housing (4 Ways) |
| 34 | 278000849 | Speed Sensor. Includes 34 - 38. |
| 35 | 278000222 | Male Terminal (18 Gauge) |
| 36 | 278000218 | Wire Seal (16 and 18 Gauge - Green) |
| 37 | 293710031 | Electrical Connector |
| 38 | 295500108 | Paddle Wheel Kit |
| 39 | 294000606 | Tie Rap 180 mm |
| 40 | 293800015 | Loctite 242, 10 ml |
| 41 | 278000281 | Female Housing (3 Ways)(Packard) |
| 42 | 216351060 | Screw M5 x 10 |
| 43 | 293800038 | Loctite 518, 50 ml |
| 44 | 278001016 | Temperature Sensor |
| 45 | 293720047 | Gauge Support |
| 46 | 278001258 | LCD Info Gauge. Includes 46 - 61. |
| 47 | 293720042 | Grommet |
| 48 | 278000223 | Female Terminal (18 Gauge)(Packard) |

# SEADOO

# 1998

# GSX Limited, 5629/5845

## Electronic Module And Electrical Accessories

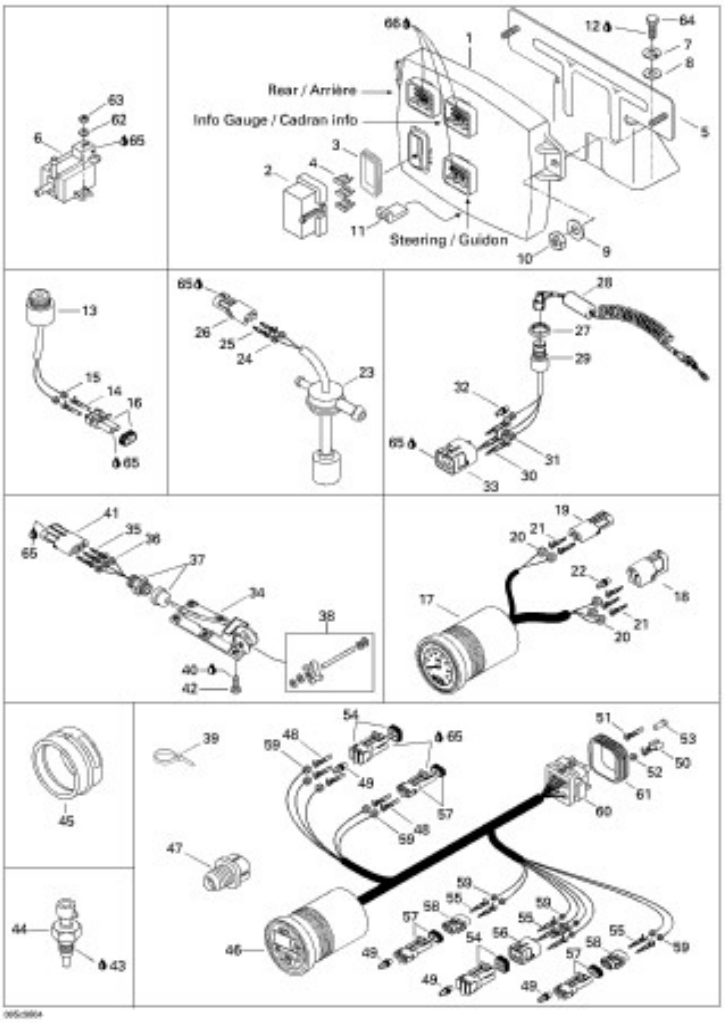


| | | |
|---|---|---|
| 49 | 278000216 | Wire Seal (Cap)(Packard) |
| 50 | 278000994 | Female Terminal(AMP) |
| 51 | 278000995 | Female Terminal(AMP) |
| 52 | 278000996 | Wire Seal(AMP) |
| 53 | 293000070 | Sealing Cap(AMP) |
| 54 | 278000891 | Male Housing (4 Ways)(Packard) |
| 55 | 278000222 | Male Terminal (18 Gauge)(Packard) |
| 56 | 278000890 | Female Housing (4 Ways)(Packard) |
| 57 | 278000220 | Male Housing (2 Ways)(Packard) |
| 58 | 278000217 | Female Housing (2 Ways)(Packard) |
| 59 | 278001065 | Wire Seal (20 Gauge)(Packard) |
| 60 | 278000993 | Male Housing (26 Ways)(AMP). Includes 60 - 61. |
| 61 | 278001307 | Wire Seal (AMP) |
| 62 | 213200004 | Flat Washer 5 mm |
| 63 | 212000004 | Elastic Stop Nut M5 |
| 64 | 211000074 | Screw Plastite |
| 65 | 293550004 | Dielectric Grease, 150 gr |
| 66 | 293800051 | Lube - Deoxit, 250 ml |

# SEADOO

# 1998

# GSX Limited, 5629/5845

# Electrical Harness

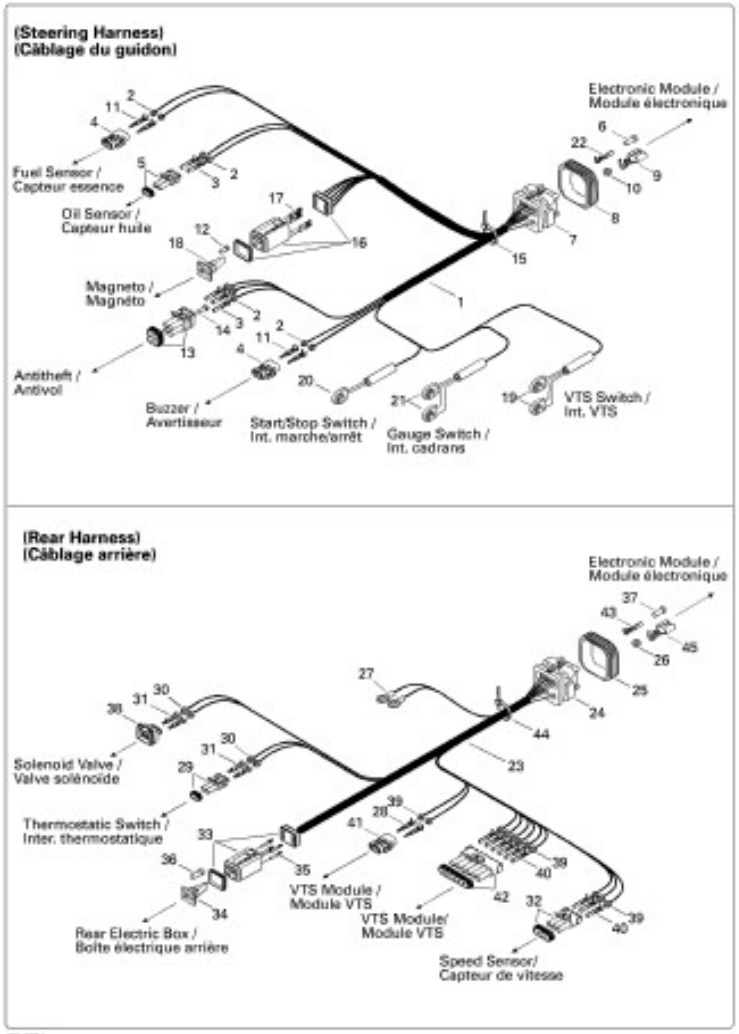


| | | |
|---|---|---|
| 1 | 278001294 | Steering Harness. Includes 1 - 22. |
| 2 | 278000218 | Wire Seal (16-18 Gauge) (Green)(Packard) |
| 3 | 278000223 | Female Terminal (18 Gauge)(Packard) |
| 4 | 278000217 | Female Housing (2 Ways)(Packard) |
| 5 | 278000220 | Male Housing (2 Ways)(Packard) |
| 6 | 293000070 | Sealing Cap(AMP) |
| 7 | 278001062 | Male Housing (26 Ways)(AMP). Includes 7 - 8. |
| 8 | 278001307 | Wire Seal (AMP) |
| 9 | 278000994 | Female Terminal(AMP) |
| 10 | 278000996 | Wire Seal(AMP) |
| 11 | 278000222 | Male Terminal (18 Gauge)(Packard) |
| 12 | 293000052 | Sealing Cap(Deutsch) |
| 13 | 278000891 | Male Housing (4 Ways)(Packard) |
| 14 | 278000216 | Wire Seal(Packard) |
| 15 | 293750002 | Tie Rap 130 mm |
| 16 | 278000736 | Male Housing (6 Ways)(Deutsch) |
| 17 | 278000632 | Female Terminal (16-18 Gauge)(Deutsch) |
| 18 | 278000737 | (Female) Secondary Lock (6 Circuits) (Deutsch) |
| 19 | 278000447 | VTS Switch Ass'y |
| 20 | 278000427 | Stop/Start Switch Ass'y |
| 21 | 278000854 | Gauge Switch Ass'y |
| 22 | 278000995 | Female Terminal(AMP) |
| 23 | 278001075 | Rear Harness. Includes 23 - 45. |
| 24 | 278001063 | Male Housing (26 Ways)(AMP). Includes 24 - 25. |
| 25 | 278001307 | Wire Seal (AMP) |
| 26 | 278000996 | Wire Seal(AMP) |
| 27 | 409003200 | Open Barrel |
| 28 | 409004300 | Male Terminal (16 Gauge)(Packard) |
| 29 | 278001005 | Male Housing (2 Ways)(Bosch) |
| 30 | 278000999 | Wire Seal(AMP) |
| 31 | 278000998 | Female Terminal(AMP) |
| 32 | 278000273 | Male Housing (3 Ways)(Packard) |
| 33 | 278000736 | Male Housing (6 ways)(Deutsch) |
| 34 | 278000737 | (Female) Secondary Lock (6 Circuits) (Deutsch) |
| 35 | 278000632 | Female Terminal (16-18 Gauge) (Deutsch) |
| 36 | 293000052 | Sealing Cap(Deutsch) |
| 37 | 293000070 | Sealing Cap(AMP) |
| 38 | 278001003 | Male Housing (2 Ways)(Bosch) |
| 39 | 278000218 | Wire Seal (16-18 Gauge) (Green)(Packard) |
| 40 | 278000223 | Female Terminal (18 Gauge)(Packard) |
| 41 | 278000217 | Female Housing (2 Ways)(Packard) |
| 42 | 278000221 | Male Housing (6 Ways)(Packard) |
| 43 | 278000995 | Female Terminal(AMP) |
| 44 | 293750002 | Tie Rap 130 mm |
| 45 | 278000994 | Female Terminal(AMP) |

# SEADOO

# 1998

# GSX Limited, 5629/5845

## Rear Electrical Box

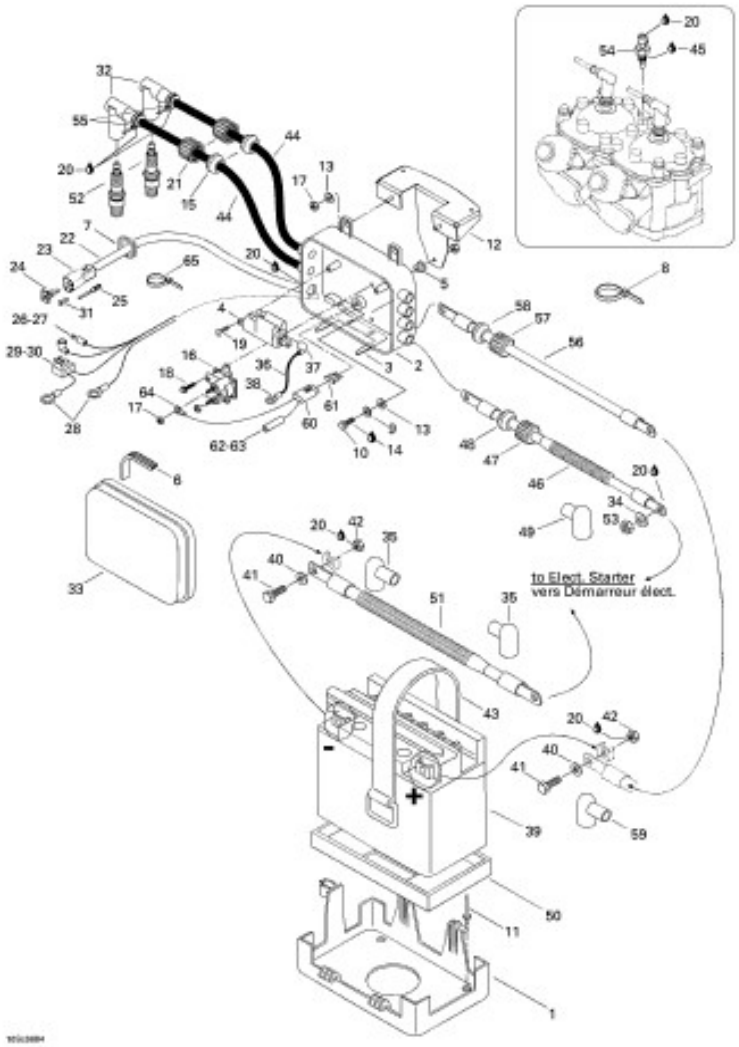


| | | |
|---|---|---|
| 1 | 278001233 | Battery Support |
| 2 | 278001171 | Base |
| 3 | 278000732 | Ground Plate |
| 4 | 278001188 | Ignition Coil |
| 5 | 293300040 | O-Ring |
| 6 | 278001173 | Gasket |
| 7 | 293200030 | Gasket |
| 8 | 293750001 | Tie Rap 94 mm |
| | 293750002 | Tie Rap 130 mm |
| | 294000606 | Tie Rap 180 mm |
| | 293750008 | Tie Rap 350 mm |
| 9 | 217361500 | Lock Washer 6 mm |
| 10 | 210000004 | Hex. Screw M6 x 20 |
| 11 | 293150037 | Rivet |
| 12 | 278001169 | Box Support Ass'y |
| 13 | 213200007 | Flat Washer 6 mm |
| 14 | 293800015 | Loctite 242, 10 ml |
| 15 | 278000682 | Grommet (Gray) |
| 16 | 278000513 | Starter Relay |
| 17 | 212000001 | Elastic Stop Nut M6 |
| 18 | 211000035 | Self Tapping Screw M6 x 10 |
| 19 | 215462550 | Tapping Screw M6.3 x 25 |
| 20 | 293550004 | Dielectric Grease, 150gr |
| 21 | 278000100 | Electric Cap |
| 22 | 278001184 | Rear Electric Box Harness. Includes 22 - 31. |
| 23 | 270000137 | Female Tab Housing (6 Ways) |
| 24 | 278000735 | (Female) Secondary Lock (6 Circuits) (Deutsch) |
| 25 | 278000631 | Male Terminal |
| 26 | 278000230 | Male Terminal |
| 27 | 278001008 | Insulation Sleeve |
| 28 | 278000992 | Open Barrel |
| 29 | 278001113 | Male Housing (2 Ways) |
| 30 | 278001114 | Female Terminal |
| 31 | 293000052 | Sealing Cap |
| 32 | 278000237 | Spark Plug Cap |
| 33 | 278001172 | Cover |
| 34 | 213200001 | Washer 6 mm |
| 35 | 278000020 | Protector Cap |
| 36 | 278000664 | Ground Harness. Includes 36 - 38. |
| 37 | 278000228 | Female Terminal (12-18 Gauge) |
| 38 | 278000300 | Open Barrel |
| 39 | 278000712 | Battery |
| 40 | 211200018 | Flat Washer 6 mm |
| 41 | 211000045 | Hex. Screw |
| 42 | 211100022 | Nut M6 |
| 43 | 293850021 | Strap |
| 44 | 278001268 | Spark Plug Wire |
| 45 | 293800038 | Loctite 518, 50ml |
| 46 | 278001183 | Starter Cable (Red). Includes 46 - 49. |
| 47 | 278000100 | Electrical Box Cap |

# SEADOO

# 1998

# GSX Limited, 5629/5845

## Rear Electrical Box

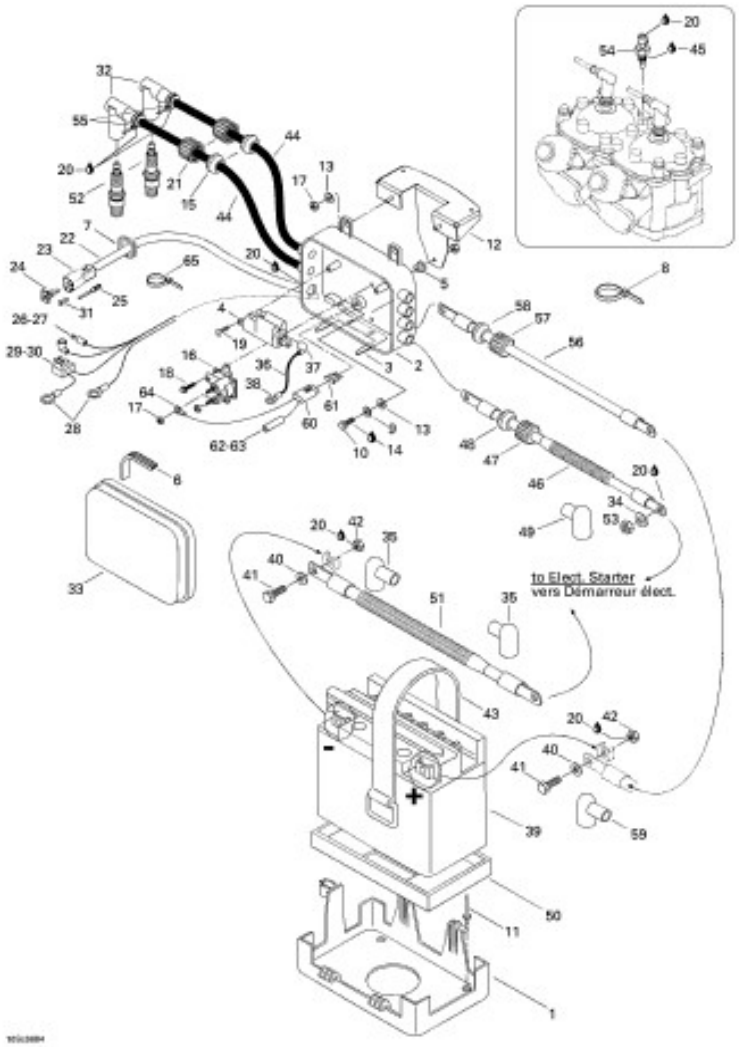


| | | |
|---|---|---|
| 48 | 278000098 | Grommet (1 Way) (Black) |
| 49 | 278000020 | Protector Cap |
| 50 | 278001234 | Battery Lower Pad |
| 51 | 278001189 | Battery Ground Cable |
| 52 | 278000609 | Spark Plug (NGK BR8-ES) |
| 53 | 212000001 | Elastic Stop Nut M6 |
| 54 | 278001016 | Temperature Sensor |
| 55 | 293750002 | Tie Rap 130 mm |
| 56 | 278001185 | Battery Cable (Red). Includes 56 - 59. |
| 57 | 278000100 | Electrical Box Cap |
| 58 | 278000098 | Grommet (1 Way) (Black) |
| 59 | 278000020 | Protector Cap |
| 60 | 278001212 | Harness Fuse 15 Amp. Includes 60 - 64. |
| 61 | 278000343 | 15 Amp. Fuse |
| 62 | 278001009 | Female Terminal |
| 63 | 278001007 | Insulation Sheath (Simple) |
| 64 | 278000300 | Open Barrel |
| 65 | 293750001 | Tie Rap 94 mm |