SEADOO

2010

Wake 155

Engine

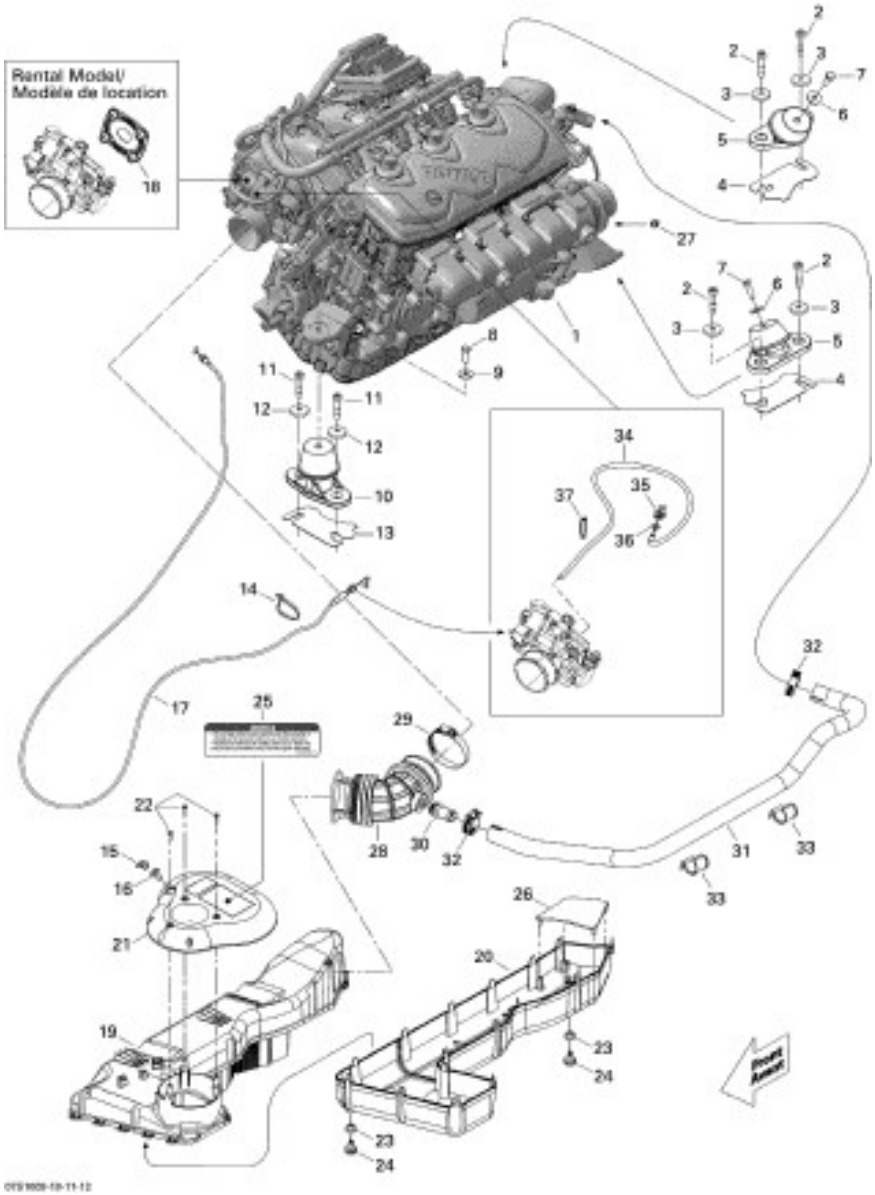

1	420150317	Engine Long Block, 1503 NA
2	250000334	Socket Head Screw M8 X 40, Scotch Grip
3	250200018	Cone Washer
4	270000762	Shim 1.3 mm
5	270000669	Rubber Mount
6	234082600	Flat Washer 8 mm, Stainless
7	207382560	Hex. Screw M8 X 25, Scotch Grip
8	207382560	Hex. Screw M8 X 25, Scotch Grip
9	234082600	Flat Washer 8 mm, Stainless
10	270000690	Rubber Mount
11	250000334	Socket Head Screw M8 X 40, Scotch Grip
12	250200018	Cone Washer
13	270000762	Shim 1.3 mm
14	414115200	Tie-Rap 180 mm
15	293750002	Tie-Rap 130 mm
16	293730040	Mount Dart
17	277001170	Throttle Cable
18	N/A	Not available for this vehicle
19	273000244	Air Silencer Upper
20	273000190	Air Silencer Lower
21	273000266	Air Silencer Cover
22	241141660	Flanged Hex. Screw K40 X 16
23	293720064	Grommet
24	275500454	Check Valve
25	219903177	Notice Decal, Air Silencer
26	273000206	Deflector
27	293750002	Tie-Rap 130 mm
28	270000628	Intake Hose
29	293650179	Tridon Gear Clamp
30	273000234	Breather
31	270000809	Formed Hose
32	293650051	Tridon Gear Clamp
33	275500664	Retainer
34	270000469	Hose 3 mm
35	293830120	Grommet Cap
36	293710107	Connector
37	293750002	Tie-Rap 130 mm

SEADOO

2010

Wake 155

Cooling System

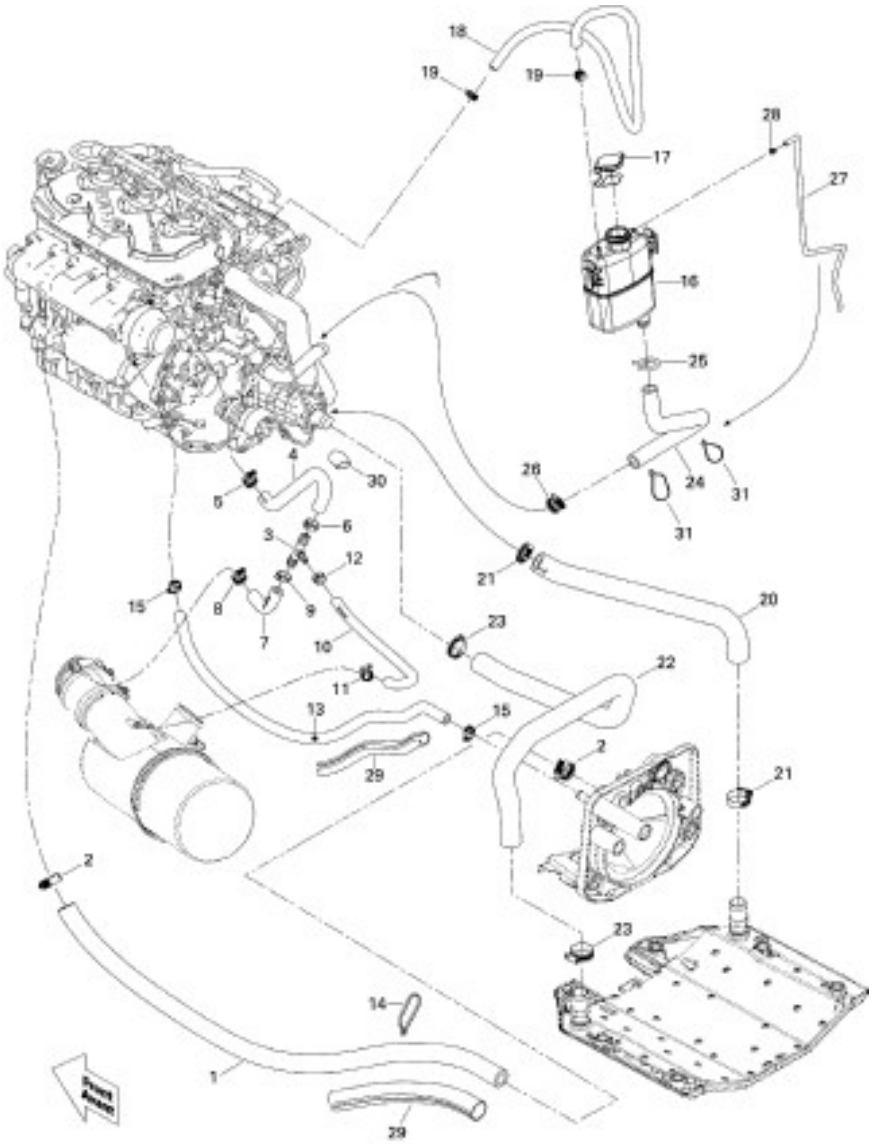

1	276000158	Hose 19 mm
2	293650051	Tridon Gear Clamp
3	293710116	T-Fitting
4	276000244	Formed Hose
5	293650172	Tridon Gear Clamp
6	293650012	Oetiker Clamp
7	276000245	Lower Formed Hose
8	293650172	Tridon Gear Clamp
9	293650012	Oetiker Clamp
10	276000246	Formed Hose
11	293650171	Tridon Gear Clamp
12	293650030	Oetiker Clamp
13	276000151	Hose 12.5 mm
14	293750008	Tie-Rap 350 mm
15	293650172	Tridon Gear Clamp
16	276000086	Coolant Tank
17	276000100	Pressure Cap Ass'y
18	204300184	Hose-1/4
19	293650170	Tridon Gear Clamp
20	276000248	RH Radiator Hose
21	293650185	Tridon Gear Clamp
22	276000250	LH Radiator Hose
23	293650185	Tridon Gear Clamp
24	276000099	Hose 19 mm
25	293650115	Spring Clamp
26	293650019	Tridon Gear Clamp
27	415080200	Hose, Polyurethane
28	293750001	Tie-Rap 94 mm
29	409902200	Tubing 25 mm
30	276000162	Shrink Tubing
31	414115200	Tie-Rap 180 mm

SEADOO

2010

Wake 155

Exhaust System

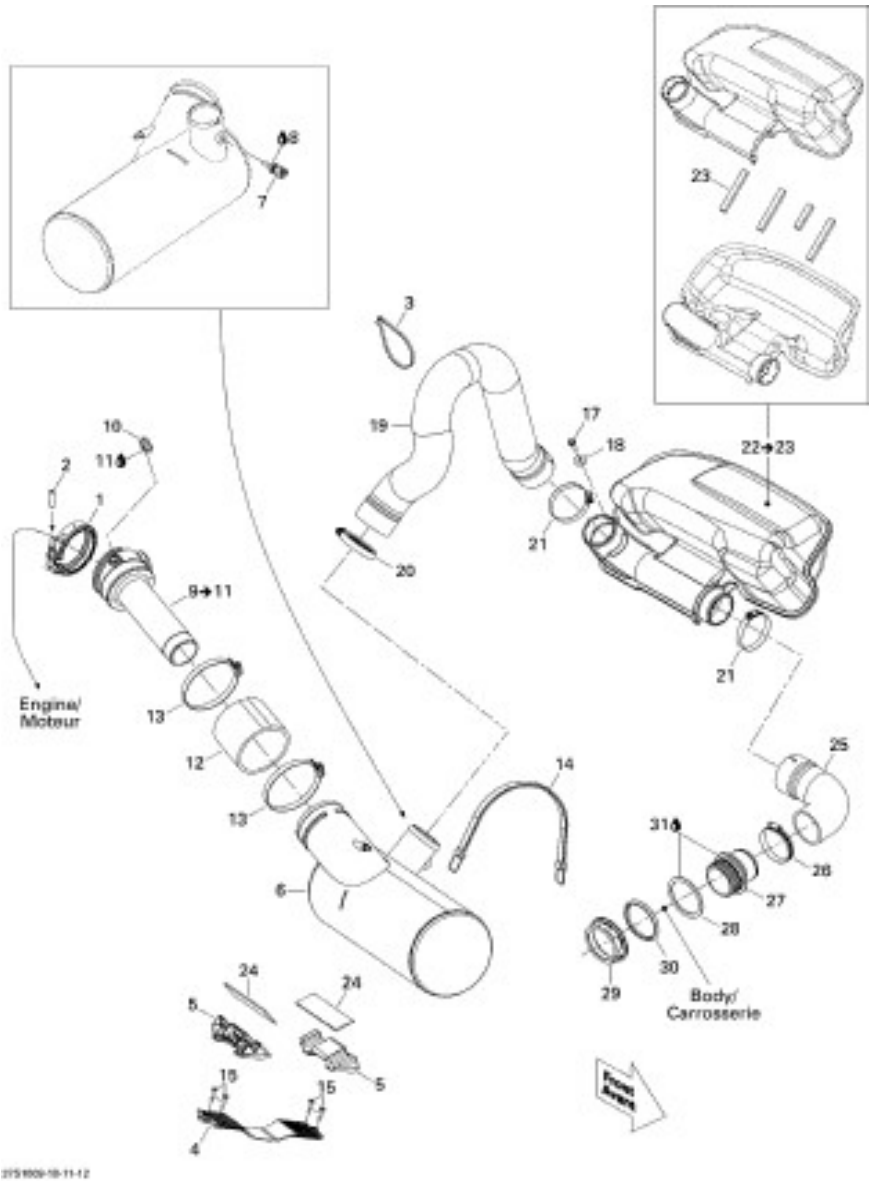

1	274001417	Exhaust Clamp
2	415080200	Hose, Polyurethane
3	293750008	Tie-Rap 350 mm
4	274001357	Exhaust Support
5	274001358	Stopper
6	274001350	Muffler
7	278001016	Temperature Sensor
8	293800038	Loctite 518, 50 ml
9	274001354	Head Pipe Ass'y. Includes 9 to 11
10	293700023	Elbow Fitting 90°
11	293800013	Loctite, Pipe Sealant, 250 ml
12	274001348	Exhaust Hose
13	293650202	Gear Clamp
14	293850093	Strap
15	293150043	Pop Rivet 3/16"
17	243162560	Hex. Flanged Screw M6.3 X 25, Plastite
18	234082600	Flat Washer 8 mm, Stainless
19	274001424	Front Exhaust Hose
20	293650179	Tridon Gear Clamp
21	293650179	Tridon Gear Clamp
22	274001366	Resonator. Includes 22 to 23
23	293200003	Neoprene Seal, Meter
24	293830126	Rubber Pad
25	274001428	Rear Exhaust Hose
26	293650179	Tridon Gear Clamp
27	274001391	Exhaust Outlet
28	293250203	Gasket
29	274000224	Nut 72 mm
30	274000225	Stabilizing Washer
31	296000309	Sealant Silicone, Clear

SEADOO

2010

Wake 155

Engine Block

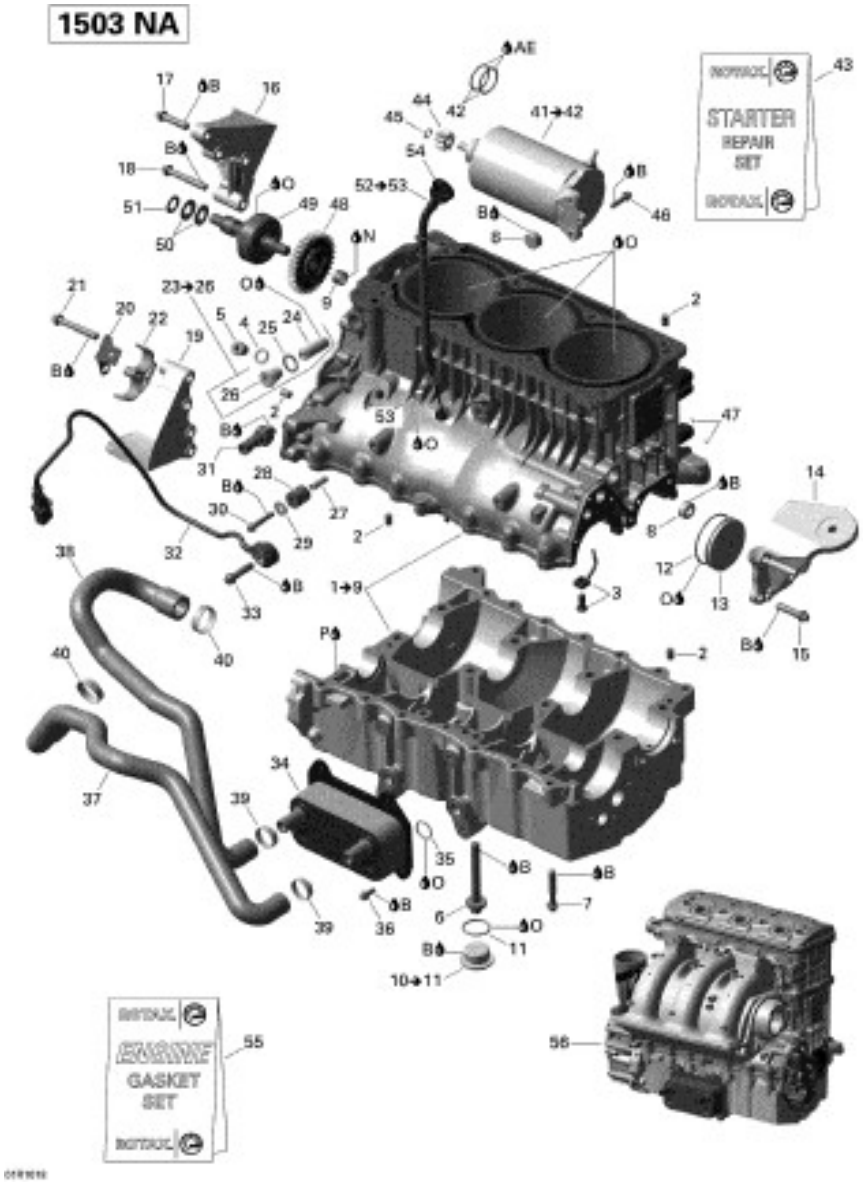

1	420890998	Cylinder Block With Sleeves. Includes 1 to 9
2	420632010	Pin 8 X 12
3	420956776	Oil Hole Adaptor
4	420250015	Washer, Copper
5	420841923	Plug Screw M12
6	420641120	Torx Flanged Screw M10 X 82
7	420641203	Torx Flanged Screw M8 X 45
8	420641317	Plug Screw M20 X 1.5
9	420232480	Needle Bushing
10	420641171	Plug Screw M30 X 1.5. Includes 10 to 11
11	420631300	O-Ring
12	420430405	O-Ring
13	420660110	Plug Cover
14	420811791	Front Engine Bracket
15	420641188	Flanged Torx Screw M8 X 35
16	420811786	Engine Bracket PTO, Exhaust
17	420641188	Flanged Torx Screw M8 X 35
18	420641213	Torx Flanged Screw M8 X 55
19	420811781	Engine Bracket PTO, Intake
20	420851740	Retaining Plate
21	420641213	Torx Flanged Screw M8 X 55
22	420660290	Hose Bracket
23	420236259	Chain Tensioner With Screw. Includes 23 to 26
24	XXX	Chain Tensioner
25	420430623	Gasket Ring
26	XXX	Plug Screw M16
27	420847971	Spacer
28	420660090	Rubber Bracket
29	420827968	Flat Washer M6
30	420641258	Flanged Torx Screw M6 X 35
31	420856532	Oil Pressure Switch
32	270000484	Noise Sensor
33	420641188	Flanged Torx Screw M8 X 35
34	420888852	Oil Radiator
35	420250055	O-Ring
36	420641048	Flanged Torx Screw M6 X 16
37	420922798	Formed Hose
38	420922792	Formed Hose
39	420851663	Gear Clamp
40	420851673	Gear Clamp
41	420888996	Electric Starter Ass'y. Includes 41 to 42
42	420631310	O-Ring
43	420664712	Carbon Brush Set
44	420834522	Starter Gear, 9 Teeth
45	420845600	Retaining Ring
46	420641238	Flanged Torx Screw M6 X 25
47	420249073	Grooved Pin
48	420889872	Friction Clutch
49	420890639	Bendix Starter
50	420238300	Spring Washer

SEADOO

2010

Wake 155

Engine Block

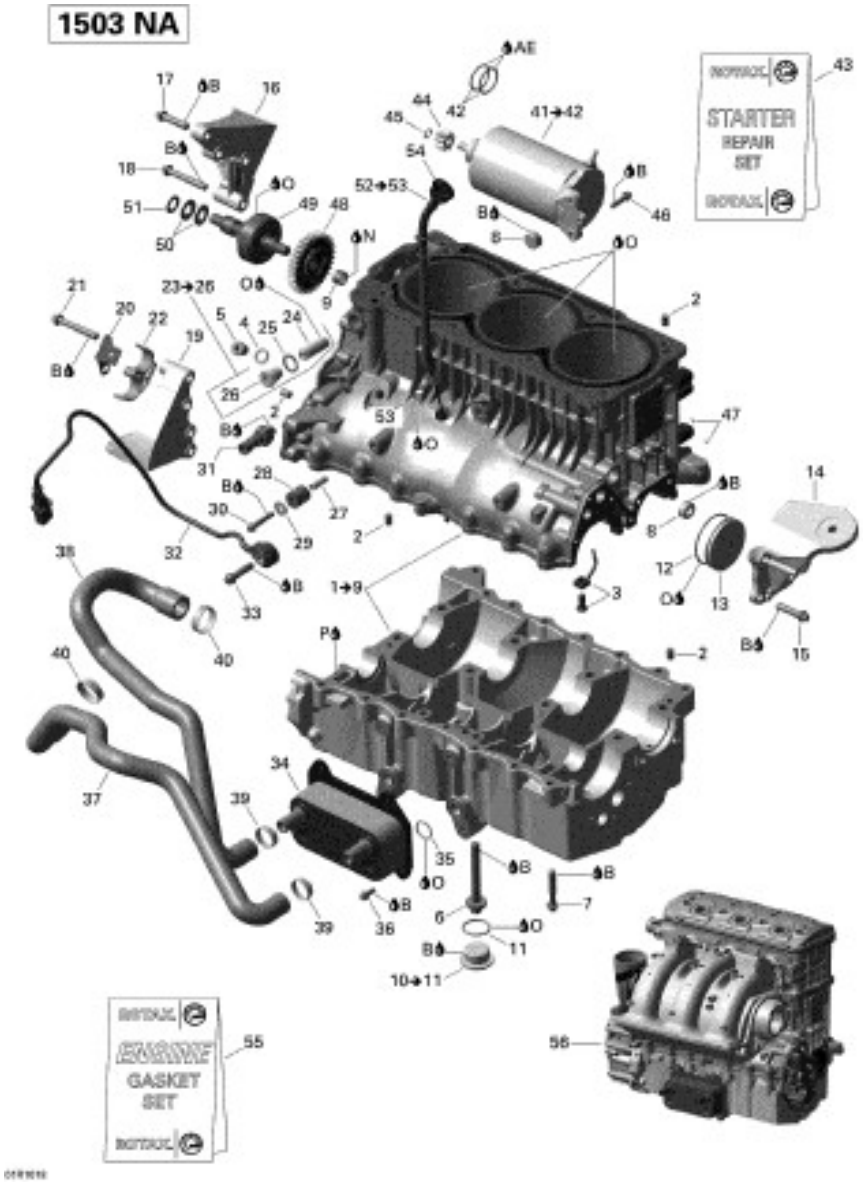

51	420827261	Thrust Washer
52	420956944	Oil Level Tube. Includes 52 to 53
53	420950810	O-Ring
54	420956932	Oil Level Gauge
55	420889773	Engine Gasket Set
56	420150317	Engine Long Block, 1503 NA
B	293800060	Loctite 243, 10 ml
N	413707000	Dow Corning 111, 150 g
O	XXX	Engine Oil
P	293800081	Loctite 5910, 300 ml
AE	293550030	Grease, Super Lube

SEADOO

2010

Wake 155

Crankshaft, Pistons And Balance Shaft

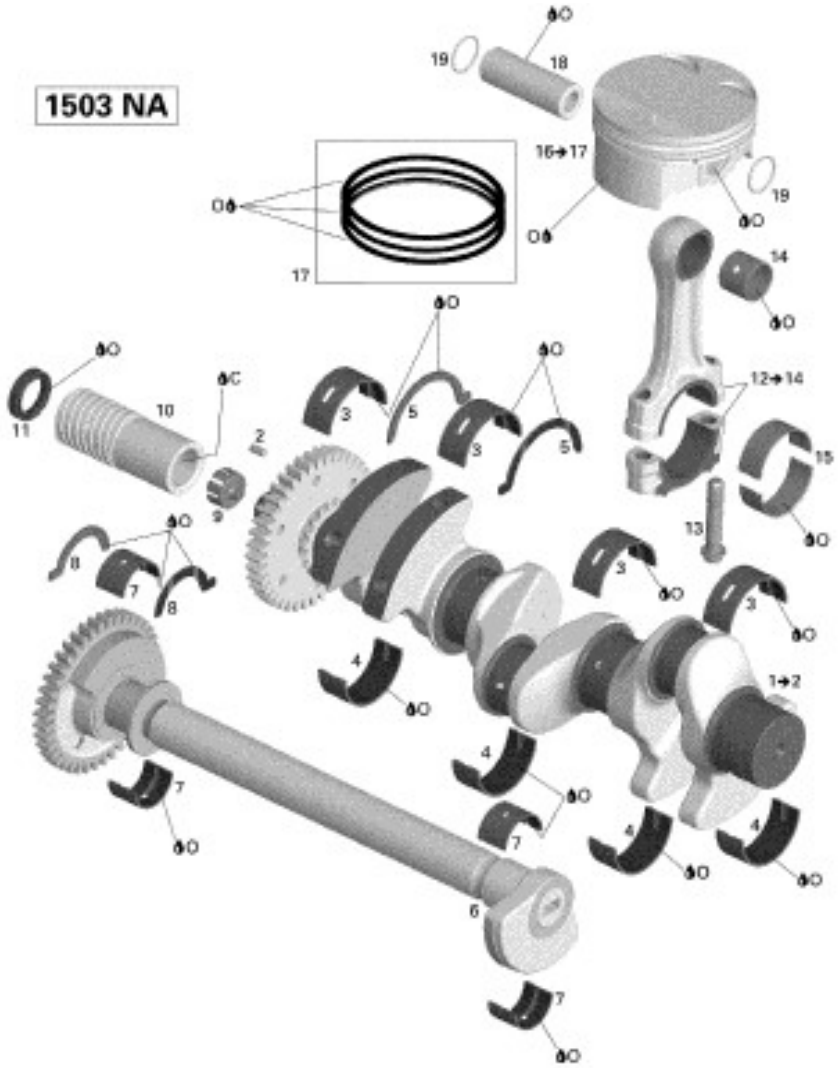

1	420819346	Crankshaft Ass'y. Includes 1 to 2
2	420929650	Drive Pin 5 X 10
3	420933455	Plain Half-Bearing
4	420933465	Plain Half-Bearing
5	420933475	Half-Ring
6	420837556	Balance Shaft Ass'y
7	420933441	Plain Half-Bearing
8	420933470	Half-Ring
9	420660280	Stop Sleeve
10	420847952	Output Sleeve
11	420630550	Sealing Ring
12	420917516	Connecting Rod Ass'y. Includes 12 to14
13	420640990	Connecting Rod Screw
14	420933510	Bearing Sleeve
15	420933520	Half-Bearing
16	420296565	Piston Ass'y, Standard, 99.96 mm. Includes 16 to 17
16	420296566	Piston Ass'y, Oversize, 100.21 mm. Includes 16 to 17
17	420890380	Piston Set Ring, Standard
17	420890381	Piston Set Ring, Oversize
18	420216250	Piston Pin
19	420845580	Circlip
C	413711400	Loctite 648, 10 ml
O	XXX	Engine Oil

SEADOO

2010

Wake 155

Cylinder Head

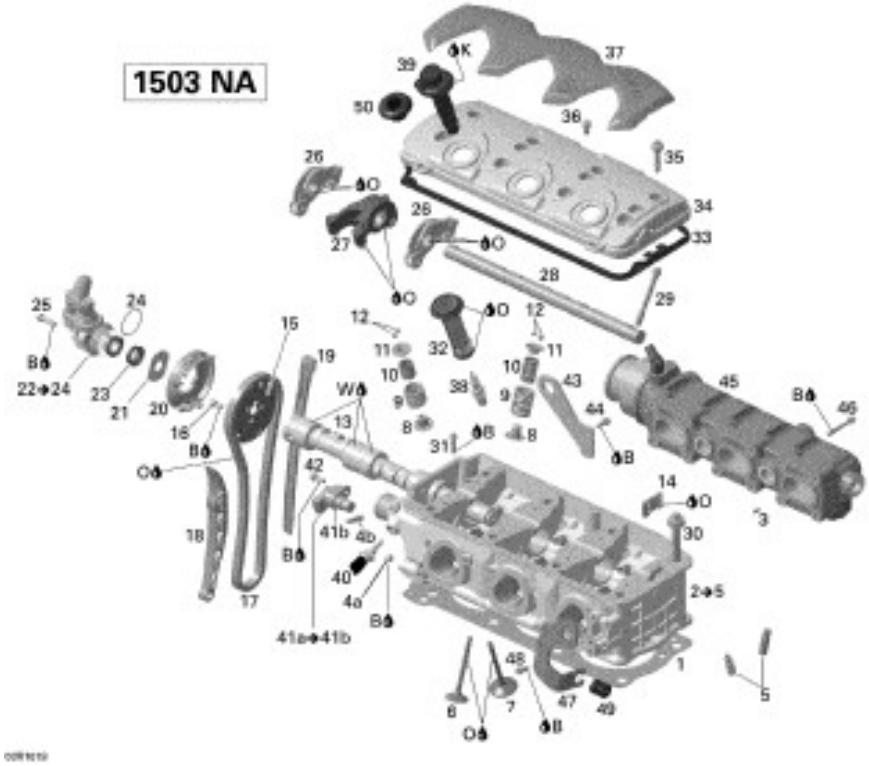

1	420950770	Cylinder Head Gasket
2	420613978	Cylinder Head Ass'y. Includes 2 to 5
3	420929650	Drive Pin 5 X 10
4a	420641323	Plug Screw M10 X 1
4b	420924720	Hose Nipple
5	420253929	Valve Guide
6	420254682	Exhaust Valve, 31 mm
7	420254293	Intake Valve, 38 mm
8	420630200	Valve Stem Seal
9	420238180	Valve Spring
10	420838280	Valve Spring Inside
11	420254283	Valve Spring Retainer
12	420253645	Valve Cotter
13	420837851	Camshaft
14	420851693	Camshaft Guide
15	420254307	Timing Gear, 38 Teeth
16	420840031	Screw M6 X 12
17	420898042	Camshaft Chain
18	420236540	Chain Tensioner Guide
19	420236501	Chain Guide
20	420660037	Cover
21	420627494	Thrust Washer
22	420856500	Vent Valve. Includes 22 to 24
23	420630125	V-Ring
24	420950870	O-Ring
25	420641238	Flanged Torx Screw M6 X 25
26	420254329	Rocker Arm, Exhaust
27	420254316	Rocker Arm, Inner
28	420854594	Rocker Arm, Shaft
29	420641080	Torx Screw M8 X 72
30	420641110	Torx Flanged Screw M11 X 147
31	420641238	Flanged Torx Screw M6 X 25
32	420851751	Spark Plug Pipe
33	420950820	Valve Cover Gasket
34	420811589	Valve Cover
35	420440560	Torx Screw M6 X 30.5
36	420641488	Torx Screw M6 X 8
37	420660167	Valve Cover
38	707000246	Spark Plug, NGK DCP-R8E
39	420664020	Stick Coil
40	278001016	Temperature Sensor
41a	420664043	Camshaft Position Sensor. Includes 41a to 41b
41b	420631890	O-Ring
42	420641048	Flanged Torx Screw M6 X 16
43	420851618	Transport Bracket PTO
44	420641048	Flanged Torx Screw M6 X 16
45	420673293	Exhaust Manifold
46	420641198	Flanged Torx Screw M6 X 45
47	420851614	Transport Bracket Front
48	420641048	Flanged Torx Screw M6 X 16
49	420660090	Rubber Bracket
50	420460830	Sealing Cup
B	293800060	Loctite 243, 10 ml
K	413707000	Dow Corning 111, 150 g
O	XXX	Engine Oil
W	293550021	Isoflex Grease, TOPAS NB52, 50 g

SEADOO

2010

Wake 155

Oil Separator

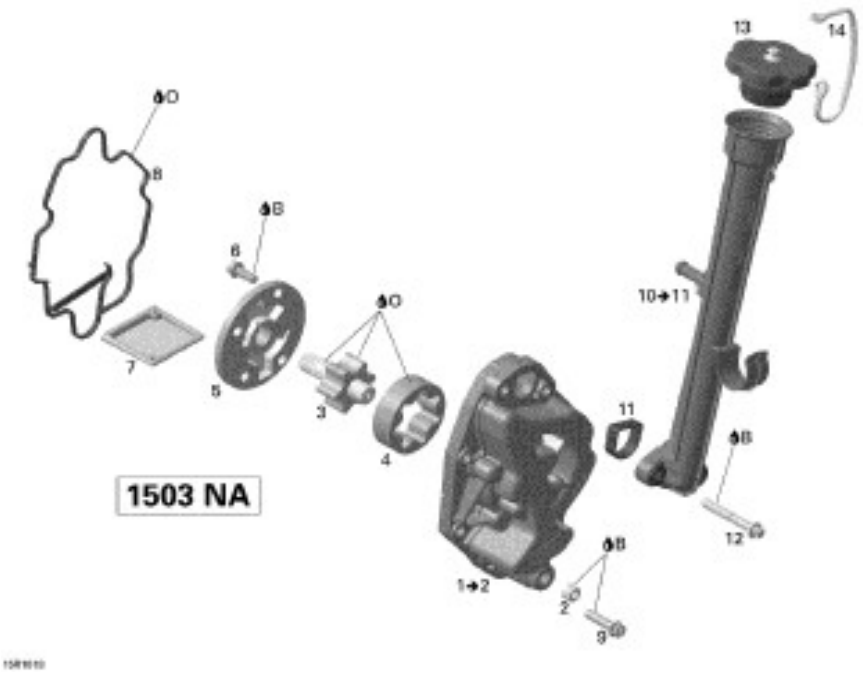

1	420812721	Oil Pump Housing. Includes 1 to 2
2	420641323	Plug Screw M10 X 1
3	420837543	Oil Pump Shaft Ass'y
4	420956675	Oil Pump Rotor 16 mm
5	420811850	Oil Pump Cover
6	420641048	Flanged Torx Screw M6 X 16
7	420856520	Oil Sieve
8	420631486	Gasket
9	420641238	Flanged Torx Screw M6 X 25
10	420856510	Oil Filler Tube. Includes 10 to 11
11	420430240	Gasket
12	420641198	Flanged Torx Screw M6 X 45
13	420956923	Plug Cover, Yellow
14	420660620	Retaining Band
B	293800060	Loctite 243, 10 ml
O	XXX	Engine Oil

SEADOO

2010

Wake 155

Air Intake Manifold And Throttle Body V1

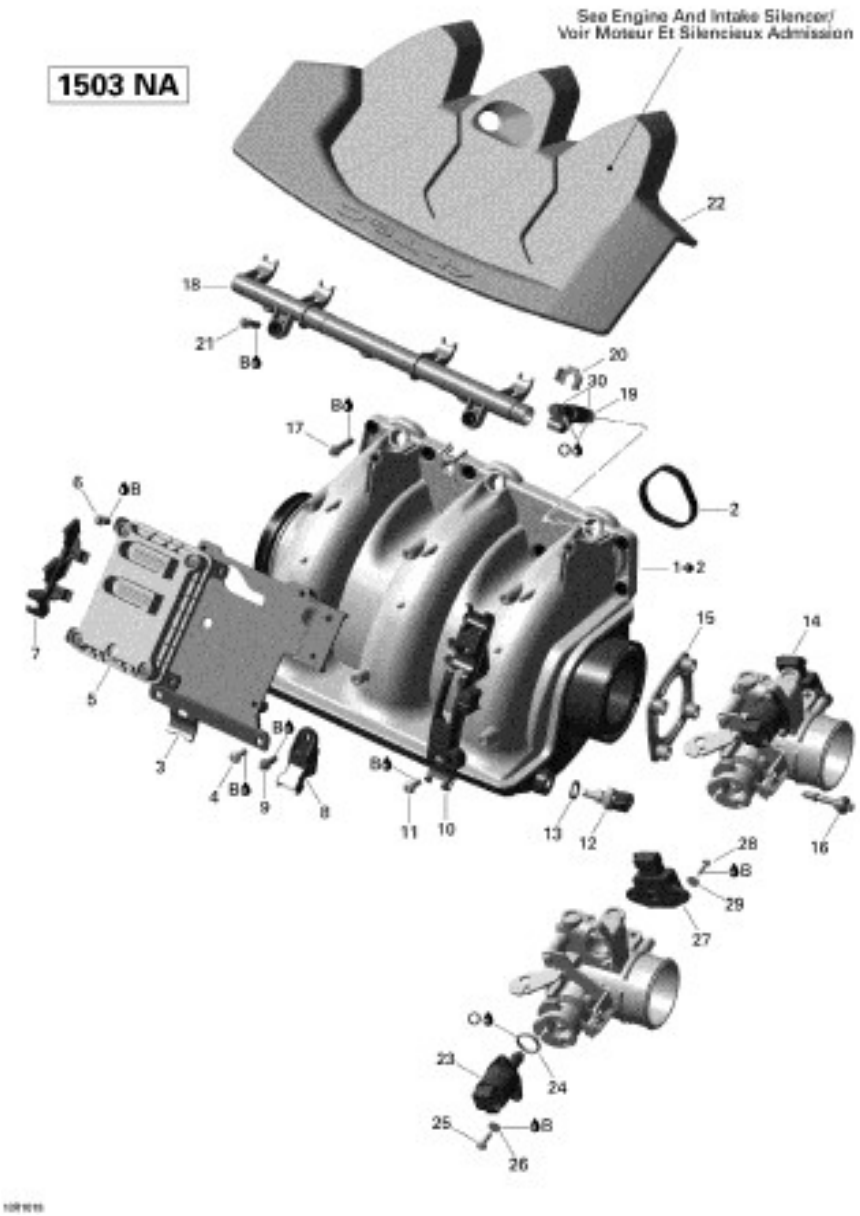

1	420867921	Air Intake Manifold. Includes 1 to 2
2	420950740	Gasket
3	420851521	Base Plate
4	420641048	Flanged Torx Screw M6 X 16
5	420665783	Electronic Box
6	420641583	Flanged Torx Screw M6 X 16
7	420660402	Connector Bracket
8	420274055	MAPS, Manifold Air Pressure Sensor
9	420641048	Flanged Torx Screw M6 X 16
10	420660410	Wiring Support
11	420641583	Flanged Torx Screw M6 X 16
12	420222423	Temperature Sensor
13	420250015	Washer, Copper
14	420892452	Throttle Body
15	420950792	Rubber Gasket
16	420440560	Torx Screw M6 X 30.5
17	420641238	Flanged Torx Screw M6 X 25
18	420874394	Fuel Rail Ass'y
19	420874430	Injector
20	420851531	Injector Clip
21	420641238	Flanged Torx Screw M6 X 25
22	XXX	Cover
23	420963057	Idle Bypass Valve
24	420631780	O-Ring
25	420440911	Binding Head Screw M5 X 16
26	420845710	Snap Ring
27	270000251	Position Sensor
28	208641660	Phillips Screw M4 X 16
29	234042600	Flat Washer 4 mm, Stainless
30	420631220	O-Ring
B	293800060	Loctite 243, 10 ml
O	XXX	Engine Oil

SEADOO

2010

Wake 155

Fuel System

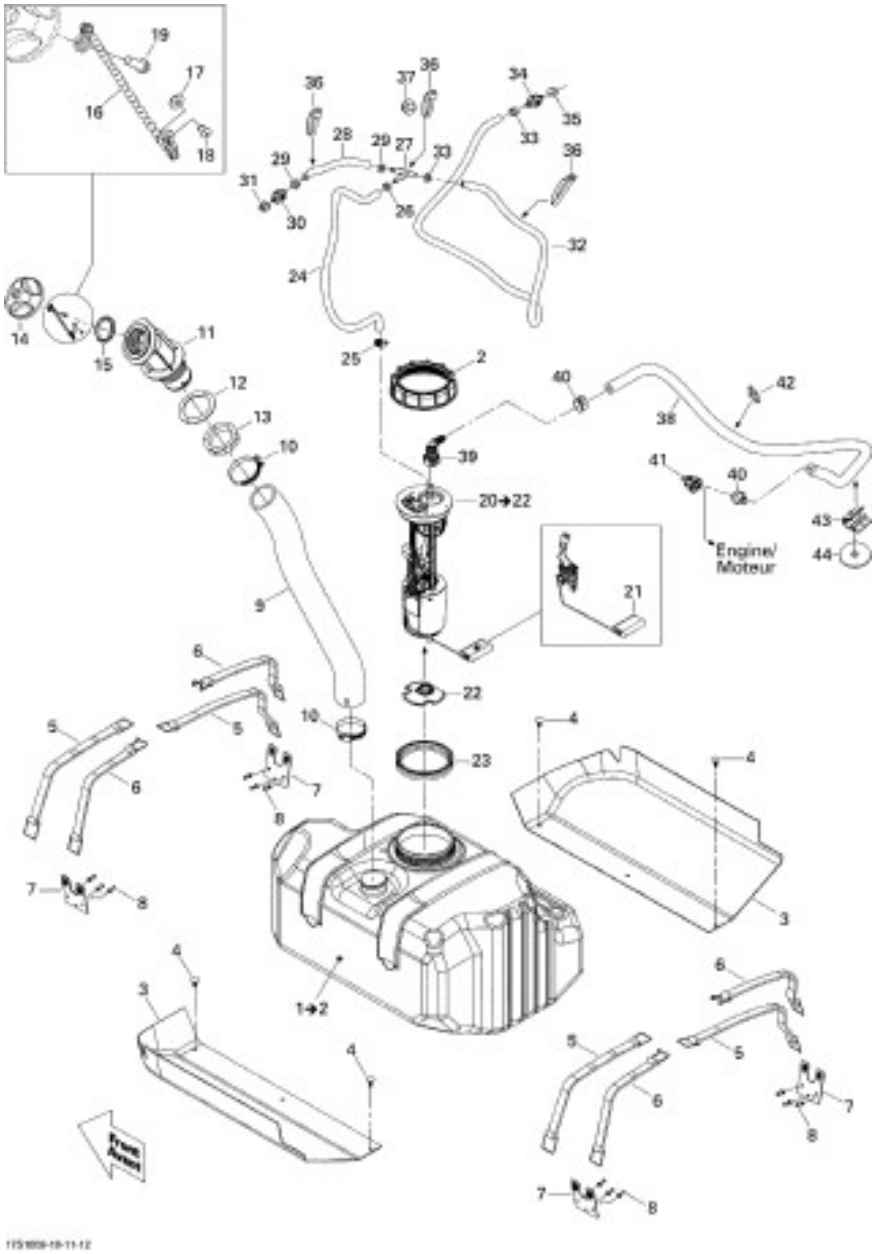

1	275500742	Fuel Tank. Includes 1 to 2
2	250100062	Special Nut M130
3	293830094	Rubber Pad
4	293730011	Dart, Black
5	293850093	Strap
6	293850094	Fuel Tank Strap
7	293850066	Strap Clip
8	293150043	Pop Rivet 3/16"
9	275500786	Fuel Filler Neck Hose
10	293650081	Norma Clamp
11	275500684	Filler Neck
12	293250029	Gasket
13	211100012	Filler Neck Nut, Fuel
14	275500430	Fuel Tank Cap, Black
15	293250211	Gasket
16	275500507	Fuel Cap Chain
17	234032600	Flat Washer M3, Stainless
18	390407900	Pop Rivet 1/8"
19	241140060	Screw K40 X 10
20	270600102	Fuel Pump Ass'y. Includes 20 to 22
21	270600103	Sensor Lever
22	270600108	Fuel Filter
23	293250173	Gasket
24	275500549	Hose 1/4"
25	293650084	Norma Clamp
26	293650025	Oetiker Gear Clamp
27	293710059	Y-Fitting
28	204300184	Hose-1/4
29	293650025	Oetiker Gear Clamp
30	275500770	Check Valve
31	293720029	Grommet
32	275500549	Hose 1/4"
33	293650025	Oetiker Gear Clamp
34	275500774	Check Valve
35	293720029	Grommet
36	414115200	Tie-Rap 180 mm
37	293730040	Mount Dart
38	296000331	Hose
39	275500700	Quick Attach 90°
40	293650140	Oetiker Clamp
41	293710105	Elbow Fitting 90°
42	414115200	Tie-Rap 180 mm
43	275500528	Hose Retainer
44	250200028	Rubber Washer

SEADOO

2010

Wake 155

PTO Cover And Magneto V1

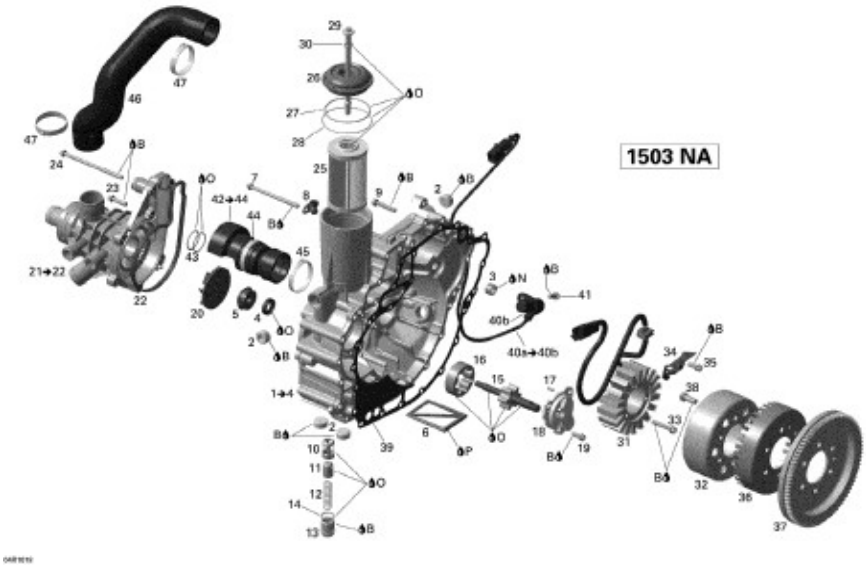

O	XXX	Engine Oil
P	293800081	Loctite 5910, 300 ml

1	420812625	Timing/Drive Cover Ass'y. Includes 1 to 4
2	420641317	Plug Screw M20 X 1.5
3	420232480	Needle Bushing
4	420650310	Oil Seal
5	420650370	Rotary Seal
6	420956950	Oil Sieve
7	420641228	Flanged Torx Screw M6 X 85
8	420853414	Clamp
9	420641258	Flanged Torx Screw M6 X 35
10	420256606	Valve Seat Sleeve
11	420256630	Piston Valve
12	420939410	Compression Spring
13	420641052	Plug Screw M20 X 1.5
14	420230890	O-Ring
15	420837472	Pump Shaft Ass'y
16	420956675	Oil Pump Rotor 16 mm
17	420929070	Needle Pin
18	420811590	Oil Pump Cover
19	420641048	Flanged Torx Screw M6 X 16
20	420922801	Impeller
21	420922686	Water Pump Housing Ass'y. Includes 21 to 22
22	420950840	Gasket
23	420641238	Flanged Torx Screw M6 X 25
24	420641338	Torx Flanged Screw M6 X 105
25	420956741	Oil Filter
26	420610329	Oil Filter Cover
27	420230920	O-Ring
28	420850500	O-Ring
29	420641105	Hex. Screw M8 X 140.5
30	420950860	O-Ring
31	420889721	Stator Plate
32	420296900	Magneto Flywheel
33	420641258	Flanged Torx Screw M6 X 35
34	420926300	Retaining Plate
35	420641048	Flanged Torx Screw M6 X 16
36	420664082	Trigger Wheel
37	420835160	Starter Gear, 86 Teeth
38	420641016	Hex. Screw M8 X 20
39	420931130	Gasket
40a	420966570	Crankshaft Position Sensor. Includes 40a to 40b
40b	420431580	O-Ring
41	420641048	Flanged Torx Screw M6 X 16
42	420832753	Ball Bearing With Bellows. Includes 42 to 44
43	N/A	Not available for this vehicle
44	420853023	Gear Clamp
45	420851653	Gear Clamp
46	420922822	Formed Hose
47	420851683	Gear Clamp
B	293800060	Loctite 243, 10 ml
N	413707000	Dow Corning 111, 150 g

SEADOO

2010

Wake 155

Pump

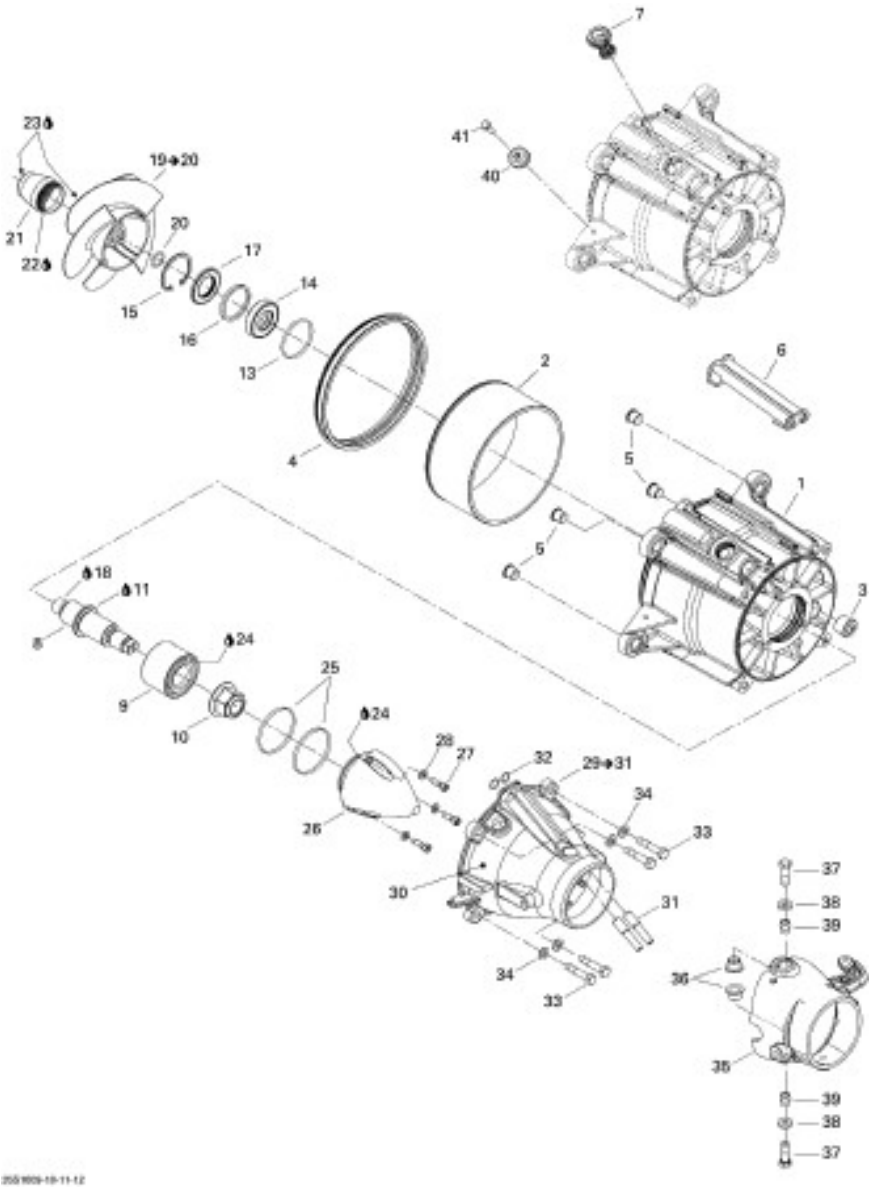

1	267000417	Impeller Housing
2	267000419	Wear Ring
3	267000469	Plug
4	293200087	Neoprene Seal
5	267000093	Bushing
6	271000785	Water Outlet
7	267000282	Plug
8	267000388	Impeller Shaft
9	267000030	Angled Bearing
10	250100104	Elastic Flange Nut
11	293550032	Jet Pump Bearing Grease, 110 G
13	293300090	O-Ring
14	293200086	Oil Seal
15	293370038	Circlip
16	271001393	Spacer
17	293200089	Oil Seal
18	293800070	Loctite 767, Antiseize Lubricant, 8 oz
19	267000434	Stainless Steel Impeller. Includes 19 to 20
20	293300114	O-Ring
21	267000206	Impeller Boot
22	293800050	Loctite 577, 250 ml
23	293550010	Synthetic Grease, 400 G
24	293550032	Jet Pump Bearing Grease, 110 G
25	293300086	O-Ring
26	267000428	Impeller Cover
27	205562560	Socket Head Screw M6 x 25 (Scotch Grip)
28	234061600	Flat Washer M6, Stainless
29	XXX	Venturi Ass'y. Includes 29 to 31
30	267000289	Venturi
31	271001133	Siphon Tube
32	293300013	O-Ring
33	207383060	Hex. Screw M8 X 30, Scotch Grip
34	234081600	Flat Washer 8 mm
35	267000140	Steering Nozzle, Black
36	293900001	Venturi Bushing
37	207383060	Hex. Screw M8 X 30, Scotch Grip
38	293050001	Flat Washer
39	271000122	Steering Nozzle Sleeve
40	271001487	Anode Zinc
41	207362060	Hex. Screw M6 X 20, Scotch Grip

SEADOO

2010

Wake 155

Propulsion

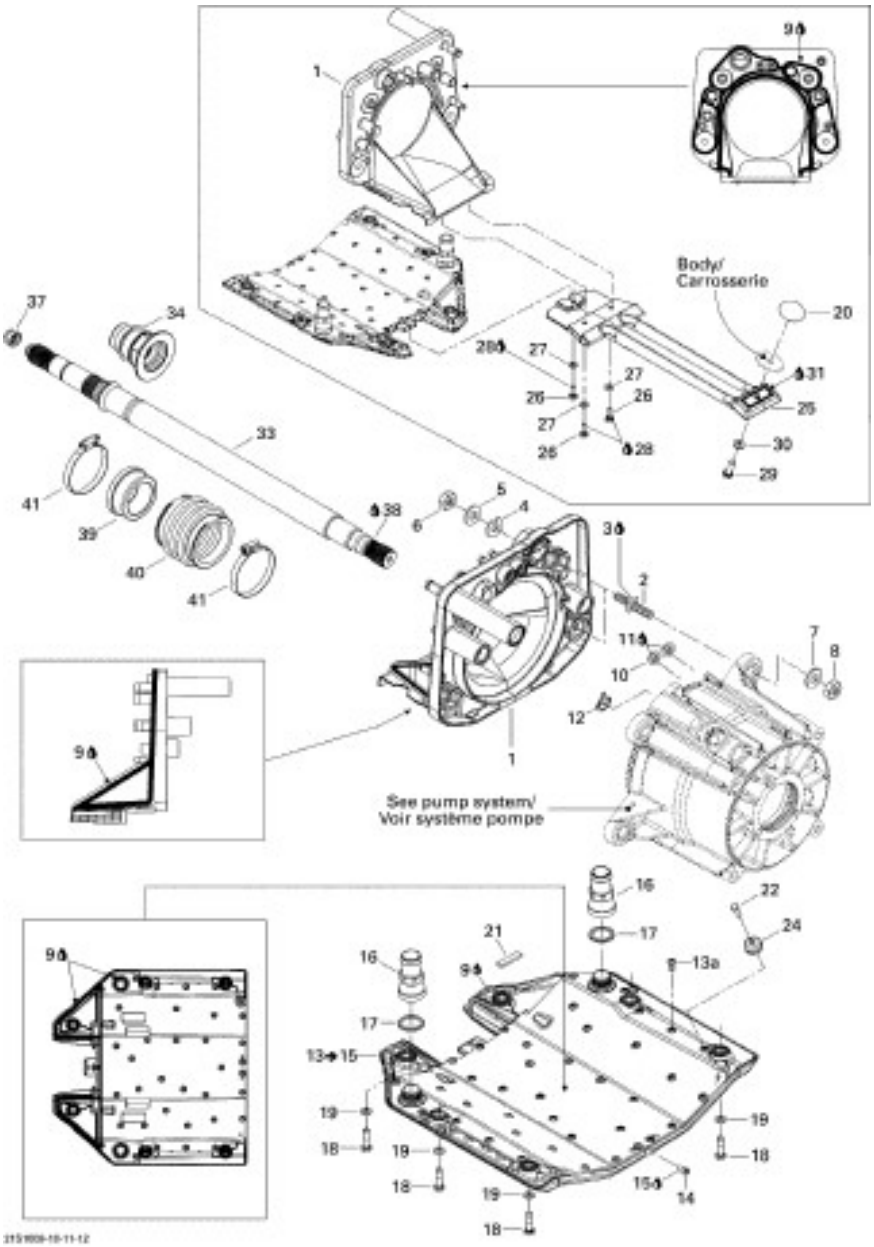

1	271001545	Pump Support
2	250300022	Square Stud
3	293800038	Loctite 518, 50 ml
4	272000053	Shim, 0.3 mm
5	234002600	Flat Washer 10 mm, Stainless
6	232501200	Brass Elastic Stop Nut, M10
7	234001600	Flat Washer 10 mm
8	232501200	Brass Elastic Stop Nut, M10
9	293800066	Sealant, Loctite 5900, 300 ml
10	293250084	Watertight Seal
11	293800038	Loctite 518, 50 ml
12	291001887	Reducer, Yellow
13	271001649	Riding Plate. Includes 13 to 15
13a	250000384	Torx Screw M6 X 14
14	250500005	Socket Drain Plug M6 X 12
15	293800013	Loctite, Pipe Sealant, 250 ml
16	293710111	Straight Plastic Fitting
17	293300121	O-Ring
18	250000230	Hex. Screw, Scotch Grip M8 X 40
19	234081600	Flat Washer 8 mm
20	293830047	Protector Disk
21	293250087	Gasket
22	207362060	Hex. Screw M6 X 20, Scotch Grip
24	271001487	Anode Zinc
25	271001527	Pump Grate, Black
26	207161660	Hex. Screw M6 X 16
27	234061600	Flat Washer M6, Stainless
28	293800005	Loctite 271, 10 ml
29	207383060	Hex. Screw M8 X 30, Scotch Grip
30	234081600	Flat Washer 8 mm
31	296000309	Sealant Silicone, Clear
33	271001623	Drive Shaft
34	271001680	Float Ring Support
37	272000173	Drive Shaft Plug
38	293550010	Synthetic Grease, 400 G
39	271001681	Carbon Ring
40	272000183	Bellows
41	293650078	Norma Clamp

SEADOO

2010

Wake 155

Reverse

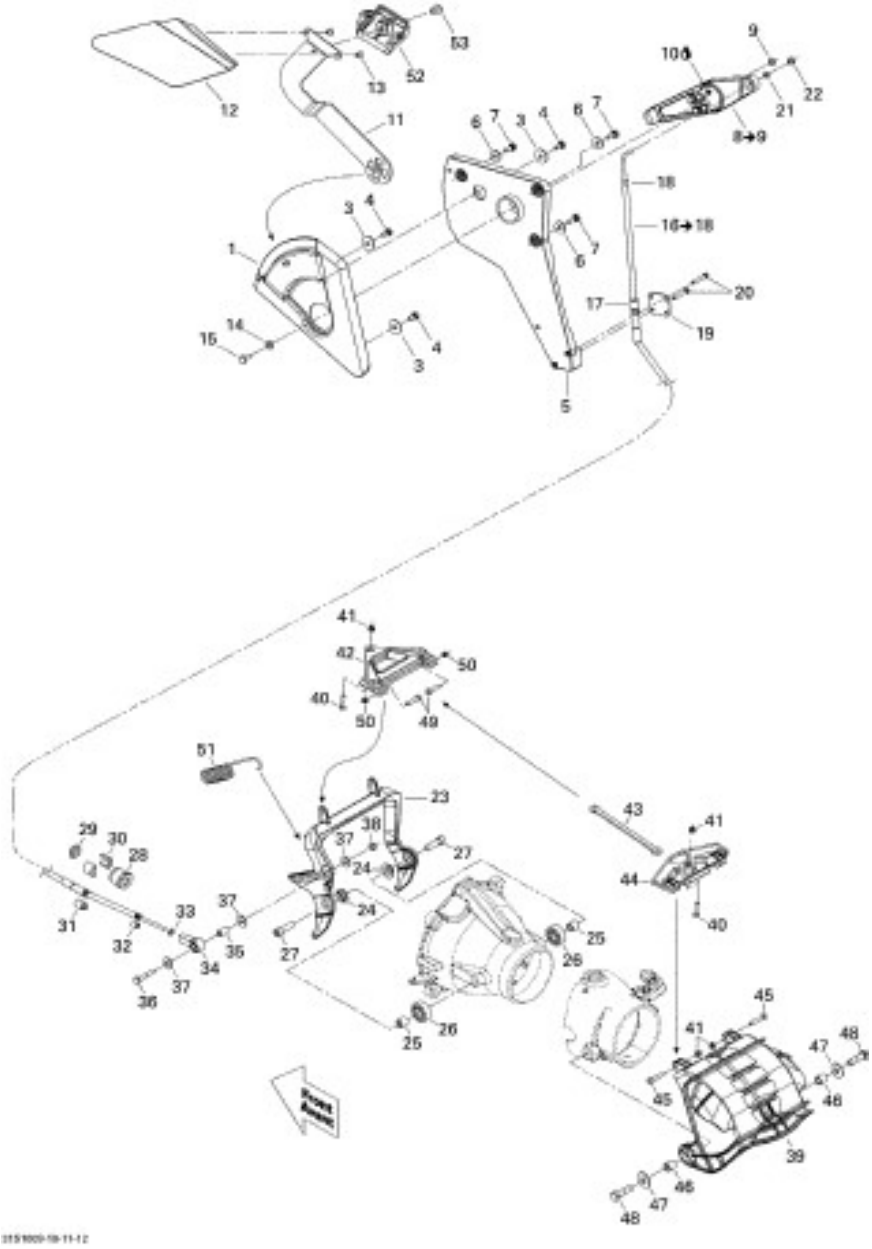

52	268000023	Handle Guide
53	204000081	Pop Rivet 3/16"

1	268000009	Reverse Handle Housing
3	250200022	Flat Washer M6.6 X 22
4	207361260	Hex. Screw M6 X 12, Scotch Grip
5	268000010	Reverse Cable Support
6	234062600	Flat Washer M6, Stainless
7	207361660	Hex. Screw M6 X 16, Scotch Grip
8	271000986	Lever Ass.. Includes 8 to 9
9	232561600	Hex. Flanged Elastic Nut M6
10	293550010	Synthetic Grease, 400 G
11	268000022	Reverse Handle Lever
12	271001540	Reverse Handle
13	250000319	Phillips Screw M5 x 12
14	234061600	Flat Washer M6, Stainless
15	207161660	Hex. Screw M6 X 16
16	268000017	Reverse Cable. Includes 16 to 18
17	268000018	Boot, Large
18	268000019	Boot, Small
19	277001058	Bracket
20	207153060	Hex. Flanged Screw M5 X 30
21	234051600	Flat Washer M5
22	212000006	Hex. Elastic Stop Nut
23	271001012	Arm Black
24	271000321	Venturi Bushing
25	271001039	Spacer
26	293900038	Bushing
27	250000026	Pivot Screw M8 X 25
28	277001729	Steering Cable Lock
29	211100009	Rubber Washer
30	277000055	Half Ring
31	268000018	Boot, Large
32	268000019	Boot, Small
33	212100005	Hex. Nut
34	277001204	Joint
35	271001020	Spacer
36	207063560	Hex. Screw M6 X 35
37	234062600	Flat Washer M6, Stainless
38	232561200	Brass Elastic Stop Nut, M6
39	268000028	Reverse Gate
40	250000018	Pivot Screw
41	232551200	Elastic Stop Nut 5 mm
42	268000013	Triangle
43	271001018	Connector Rod
44	268000014	Rod Pivot
45	250000023	Screw Pivot
46	271001039	Spacer
47	234082600	Flat Washer 8 mm, Stainless
48	207383060	Hex. Screw M8 X 30, Scotch Grip
49	250000018	Pivot Screw
50	232551200	Elastic Stop Nut 5 mm
51	271001328	Spring

SEADOO

2010

Wake 155

Off Power Assisted Steering

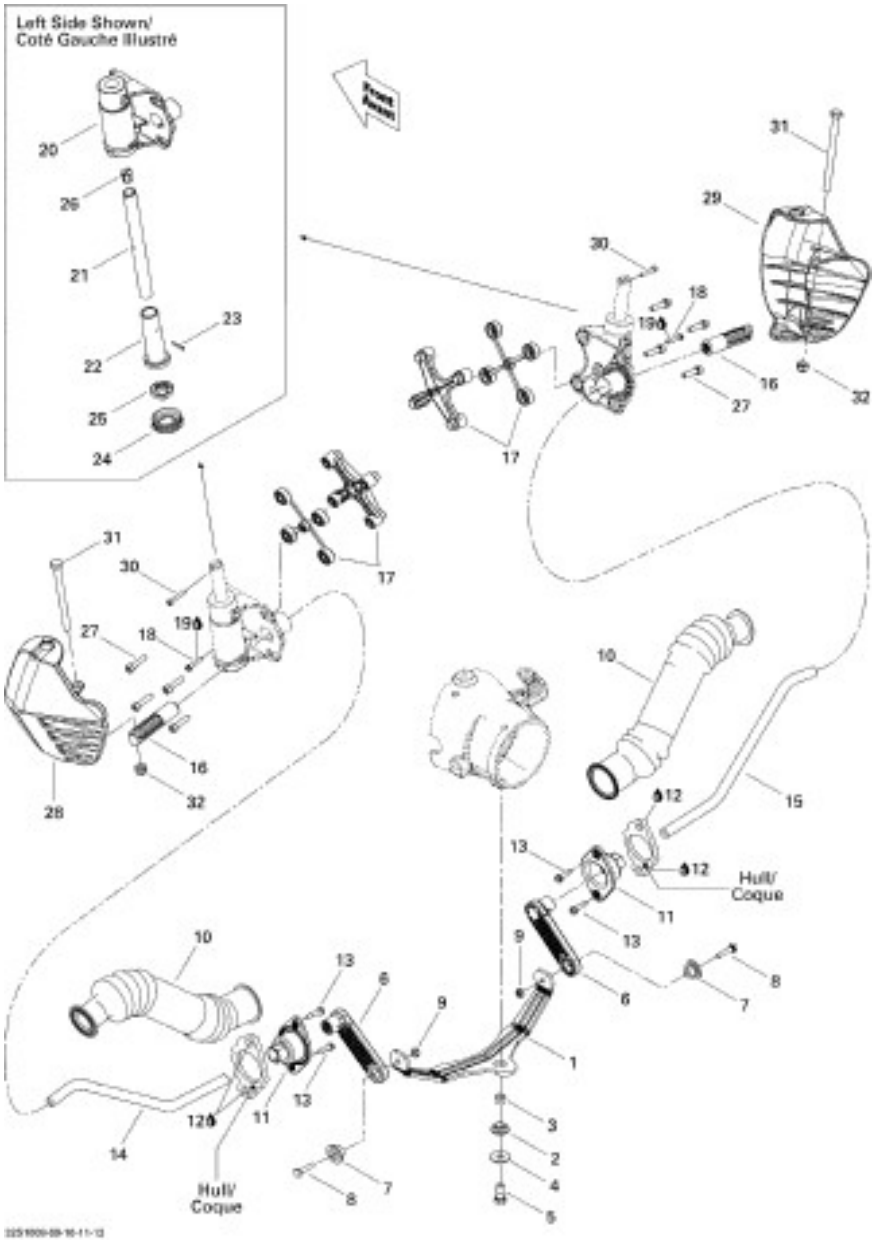

1	277000979	U Lever
2	271000321	Venturi Bushing
3	277000980	Bushing
4	234082600	Flat Washer 8 mm, Stainless
5	207382060	Hex. Screw M8 X 20, Scotch Grip
6	265000013	Lever
7	293900042	Flanged Bushing
8	207162560	Hex. Screw M6 X 25
9	232561200	Brass Elastic Stop Nut, M6
10	277001123	Seal Tube
11	277001164	Rod Grommet
12	296000309	Sealant Silicone, Clear
13	211000023	Hex. Screw 10-14 X 7/8”
14	277001459	LH Steering Rod
15	277001404	RH Steering Rod
16	265000014	Fitting Stabilisator
17	277001177	Support Plate Ass'y
18	241142560	Hex. Flanged Screw K40 X 25
19	296000309	Sealant Silicone, Clear
20	265000039	LH Cylinder Support
20	265000040	RH Cylinder Support
21	277001091	Pivot Rod
22	265000048	Spacer
23	250400014	Spring Pin
24	265000009	Threaded Cover
25	277000985	Wear Ring
26	277001185	Locking Insert
27	250000328	Torx Screw M6 X 25, Scotch Grip
28	277001486	LH Side Vane
29	277001487	RH Side Vane
30	205042560	Socket Head Screw M4 X 25
31	250000077	Hex. Screw M8 X 110
32	232581200	Hex. Elastic Nut M8, Brass

SEADOO

2010

Wake 155

Steering

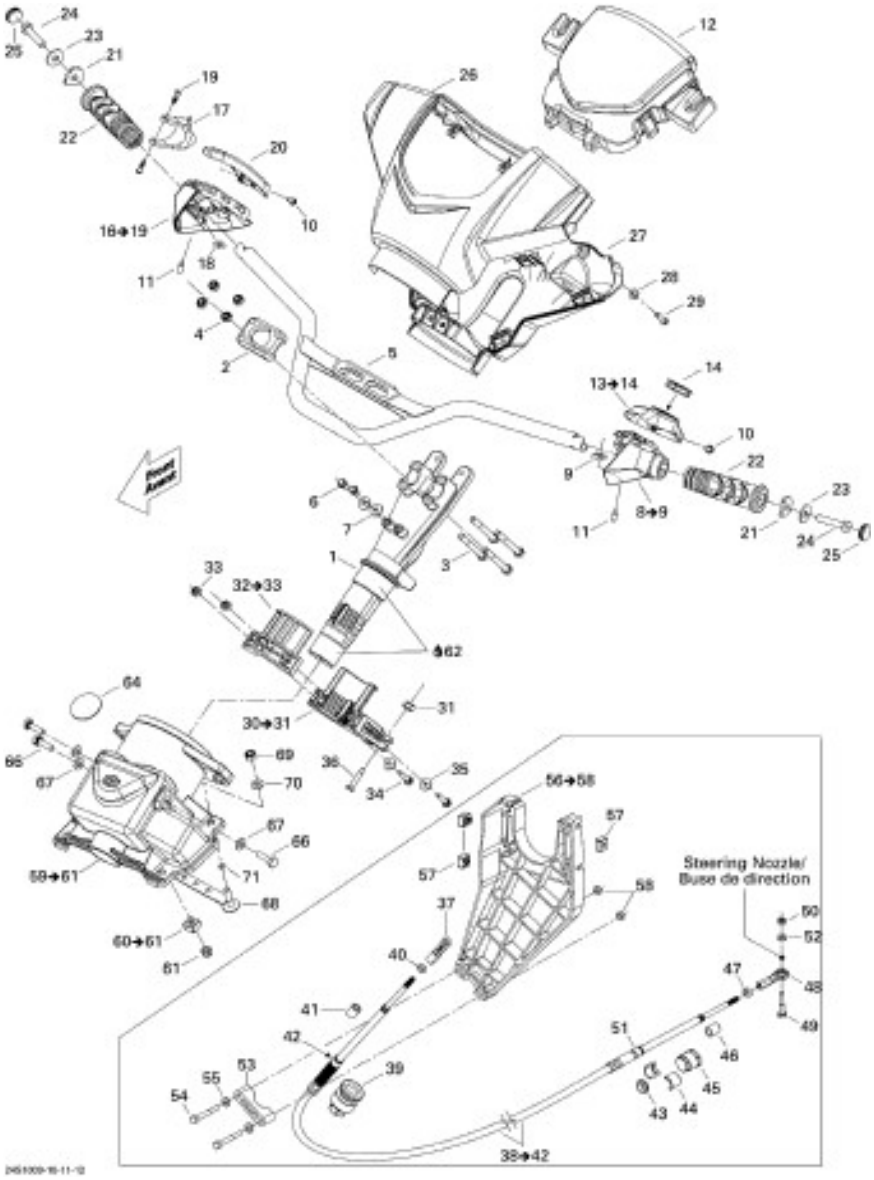

1	277001730	Steering Stem
2	277000142	Steering Clamp
3	207087060	Hex. Screw M8 X 70
4	232581200	Hex. Elastic Nut M8, Brass
5	277001498	Handle Bar
6	211000036	Hex. Flanged Screw 1/4"-20 X 1/2"
7	234062600	Flat Washer M6, Stainless
8	277001481	Housing Ass'y. Includes 8 to 9
9	232860600	Square Nut M6
10	209630960	Phillips Screw M3.9 X 9.5
11	250000036	Socket Head Screw M6 X 16
12	277001544	Handle Pad
13	277001440	Housing Cover Ass'y. Includes 13 to 14
14	278001713	Stop Knob
16	277001483	Throttle Housing Ass'y. Includes 16 to 19
17	277001485	Throttle Handle
18	232860600	Square Nut M6
19	277000381	Pin
20	277001023	Throttle Housing Cover
21	277000554	Handle Grip Insert
22	277001336	Handle Grip, Slate Grey
23	234062600	Flat Washer M6, Stainless
24	250000002	Hex. Screw M6 X 30, Scotch Grip
25	277000203	Cap, Black
26	277001518	Upper Steering Cover
27	277001519	Lower Steering Cover
28	234051600	Flat Washer M5
29	241141660	Flanged Hex. Screw K40 X 16
30	277001520	Support. Includes 30 to 31
31	232561200	Brass Elastic Stop Nut, M6
32	277001521	Arm Thrust. Includes 32 to 33
33	232561200	Brass Elastic Stop Nut, M6
34	207162560	Hex. Screw M6 X 25
35	234062600	Flat Washer M6, Stainless
36	211000081	Hex. Screw M6 X 30
37	277001180	Ball Joint
38	277001580	Steering Cable. Includes 38 to 42
39	277000782	Ajustment Knob
40	211100056	Hex. Nut 1/4"-28
41	277001582	Small Boot
42	277001583	Large Boot
43	293830063	Rubber Washer
44	277001527	Half Ring
45	277001729	Steering Cable Lock
46	277001582	Small Boot
47	211100056	Hex. Nut 1/4"-28
48	277000775	Ball Joint
49	207063560	Hex. Screw M6 X 35
50	232561200	Brass Elastic Stop Nut, M6
51	277001583	Large Boot

SEADOO

2010

Wake 155

Steering

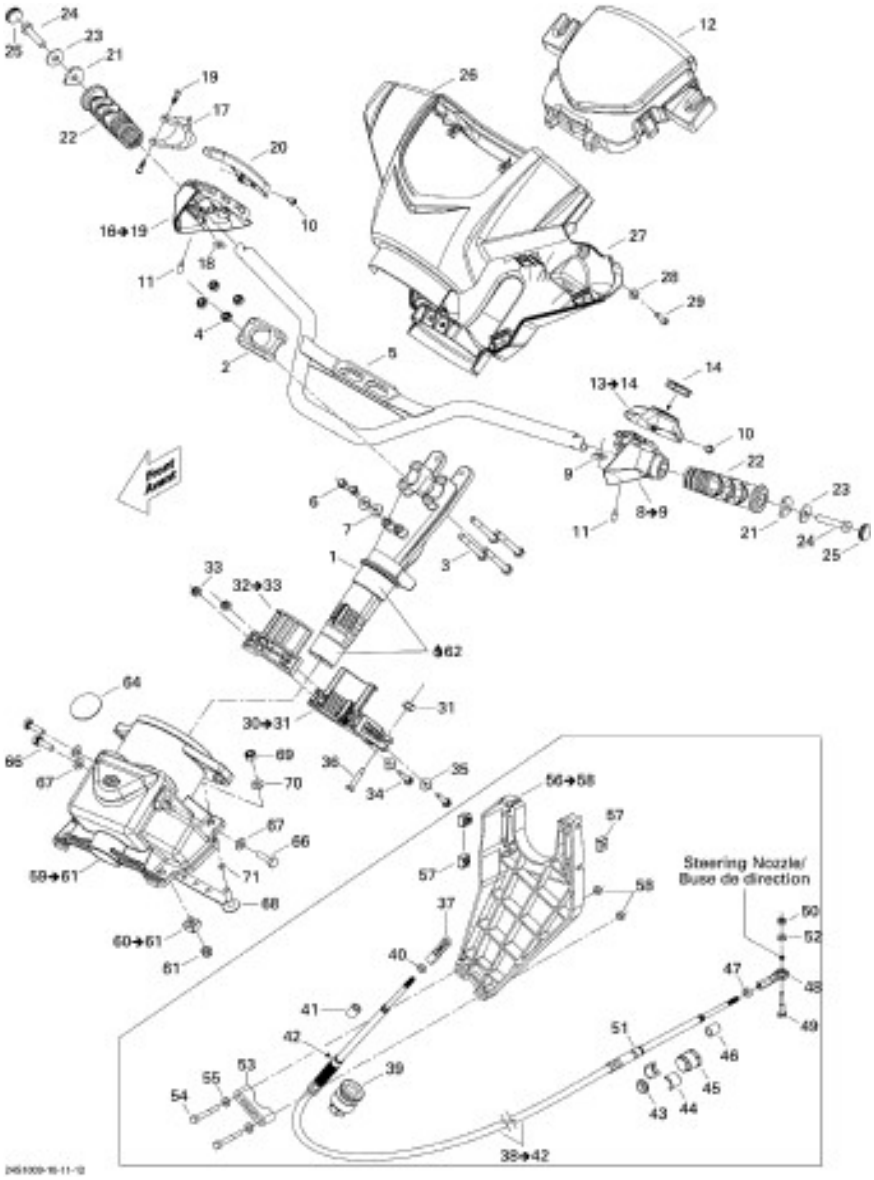

52	234061600	Flat Washer M6, Stainless
53	277001528	Support Thrust
54	207065060	Hex. Screw M6 X 50
55	234061600	Flat Washer M6, Stainless
56	277001522	Cable Support. Includes 56 to 58
57	269500252	M6 Nut Housing Ass'y
58	232561200	Brass Elastic Stop Nut, M6
59	277001471	Steering Support. Includes 59 to 61
60	271000598	Nut Housing Ass'y. Includes 60 to 61
61	232501600	Hex. Elastic Nut M10
62	293550010	Synthetic Grease, 400 G
64	N/A	Not available for this vehicle
66	207162060	Hex. Forming Screw M6 X 20
67	234061600	Flat Washer M6, Stainless
68	277001072	Steering Support
69	232581200	Hex. Elastic Nut M8, Brass
70	234081600	Flat Washer 8 mm
71	293300123	O-Ring

SEADOO

2010

Wake 155

Body, Front View

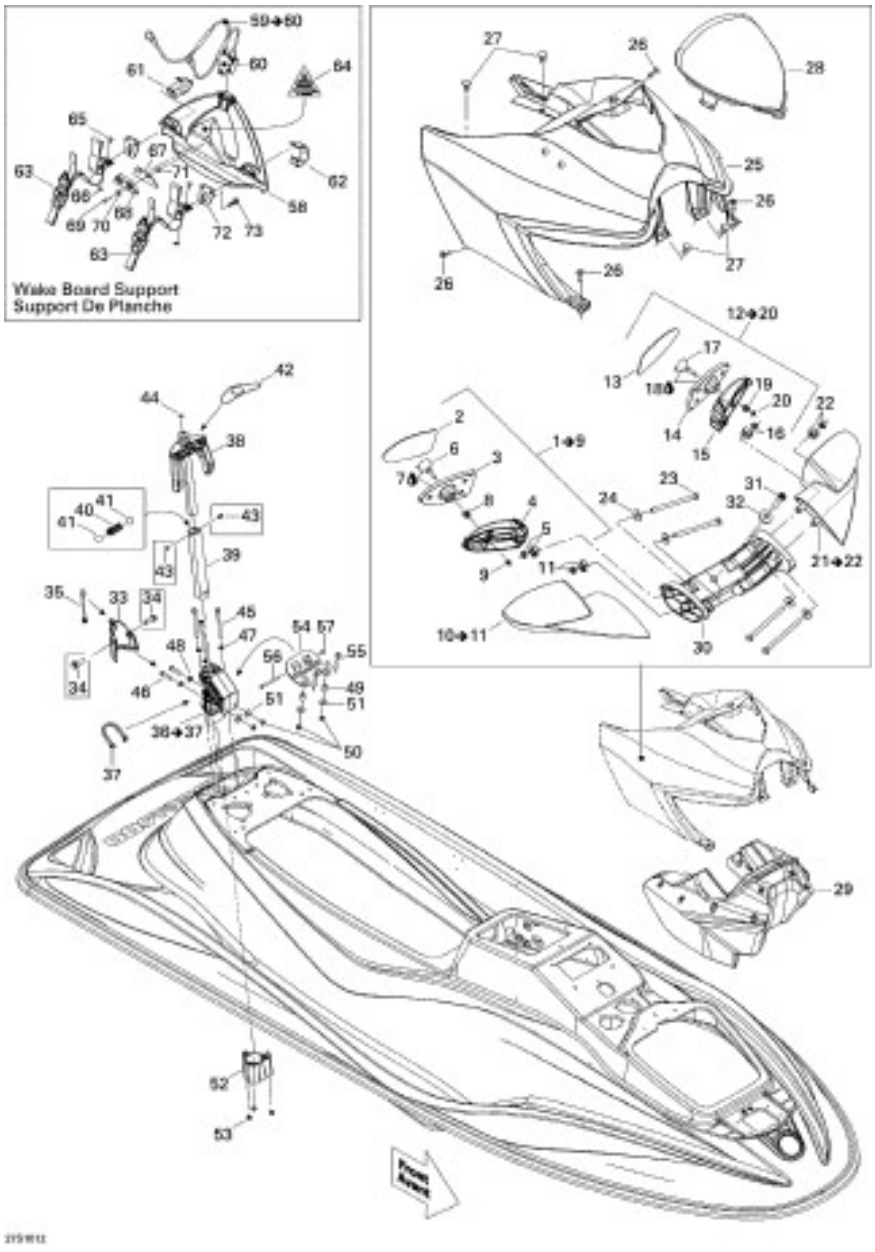

1	269501393	RH Mirror Ass'y. Includes 1 to 9
2	XXX	RH Mirror
3	269500697	Frame Mirror
4	XXX	Housing Support
5	269501387	Nut Housing Ass'y
6	269500079	Mirror Ball Joint
7	293550010	Synthetic Grease, 400 G
8	269500453	Mirror Spring
9	232561600	Hex. Flanged Elastic Nut M6
10	269501522	RH Mirror Shell Ass'y. Includes 10 to 11
11	269501387	Nut Housing Ass'y
12	269501394	LH Mirror Ass'y. Includes 12 to 20
13	XXX	LH Mirror
14	269500697	Frame Mirror
15	XXX	Housing Support
16	269501387	Nut Housing Ass'y
17	269500079	Mirror Ball Joint
18	293550010	Synthetic Grease, 400 G
19	269500453	Mirror Spring
20	232561600	Hex. Flanged Elastic Nut M6
21	269501521	LH Mirror Shell Ass'y. Includes 21 to 22
22	269501387	Nut Housing Ass'y
23	230082060	Hex. Screw M8 X 120
24	234082600	Flat Washer 8 mm, Stainless
25	291002799	Podium
26	293150123	Pop Rivet 3/16"
27	293730039	Dart
28	291002511	Wind Screen
29	292001095	Float Platform
30	277001475	Mirror Support
31	205004060	Socket Head Screw M10 X 40
32	234002600	Flat Washer 10 mm, Stainless
33	291002661	Cap
34	241141360	Hex. Flanged Screw K40 X 13
35	269501743	Strap
36	291002560	Post Support Ass'y. Includes 36 to 37
37	293250183	Strap
38	291002812	Molded Handle
39	291002642	Aluminum Post
40	269501651	Spring Ball
41	293350062	Ball 1/4"
42	219903137	Warning Label
43	293150167	Type "U" Metallic Drive Screw
44	291001519	Bumper Plug, Black
45	231080060	Socket Head Screw M8 X 100
46	205083560	Socket Head Screw M8 X 35
47	234081600	Flat Washer 8 mm
48	293050001	Flat Washer
49	291002796	Spacer
50	232581200	Hex. Elastic Nut M8, Brass

SEADOO

2010

Wake 155

Body, Front View

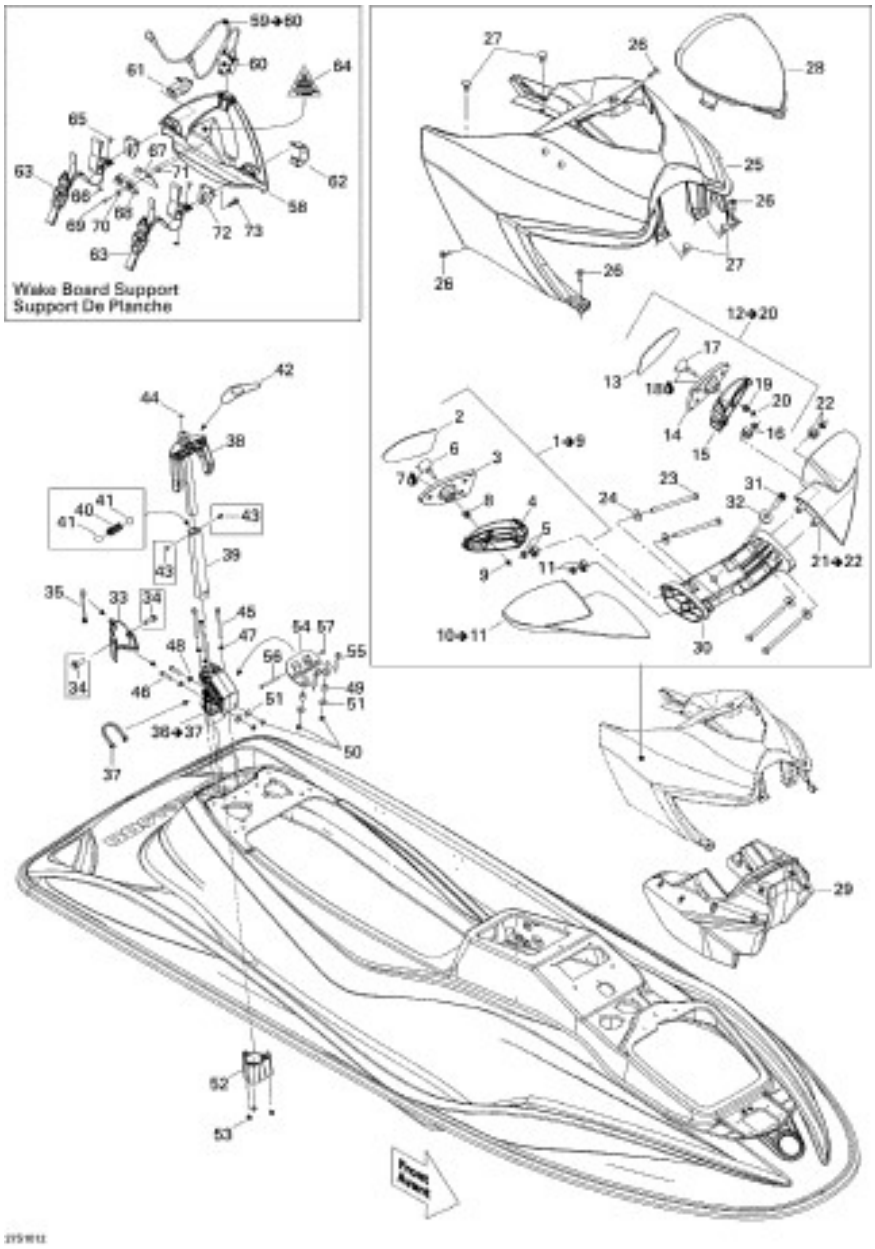

51	234082600	Flat Washer 8 mm, Stainless
52	291002787	Flange
53	232581200	Hex. Elastic Nut M8, Brass
54	291002800	Post Reinforcement Brace
55	205084560	Socket Head Screw M8 X 45
56	207068060	Hex. Screw M6 x 80
57	232561200	Brass Elastic Stop Nut, M6
58	291002256	Board Support
59	291002026	Elastic Rope Ass'y. Includes 59 to 60
60	XXX	Rope Cap
61	291002027	LH Bracket Support
62	291002028	RH Bracket Support
63	291002029	Strap Ass'y
64	219902347	Warning Decal, English, Secure Board
65	293150104	Pop Rivet 3/16"
66	517124300	Washer
67	293250149	Gasket
68	293830116	Spacer
69	205462560	Socket Screw M6 X 25
70	234062600	Flat Washer M6, Stainless
71	250100083	Expansion Nut M6 X 1
72	291002050	Board Rack
73	250000382	Countersunk Head Screw 8 X 1

SEADOO

2010

Wake 155

Body, Rear View

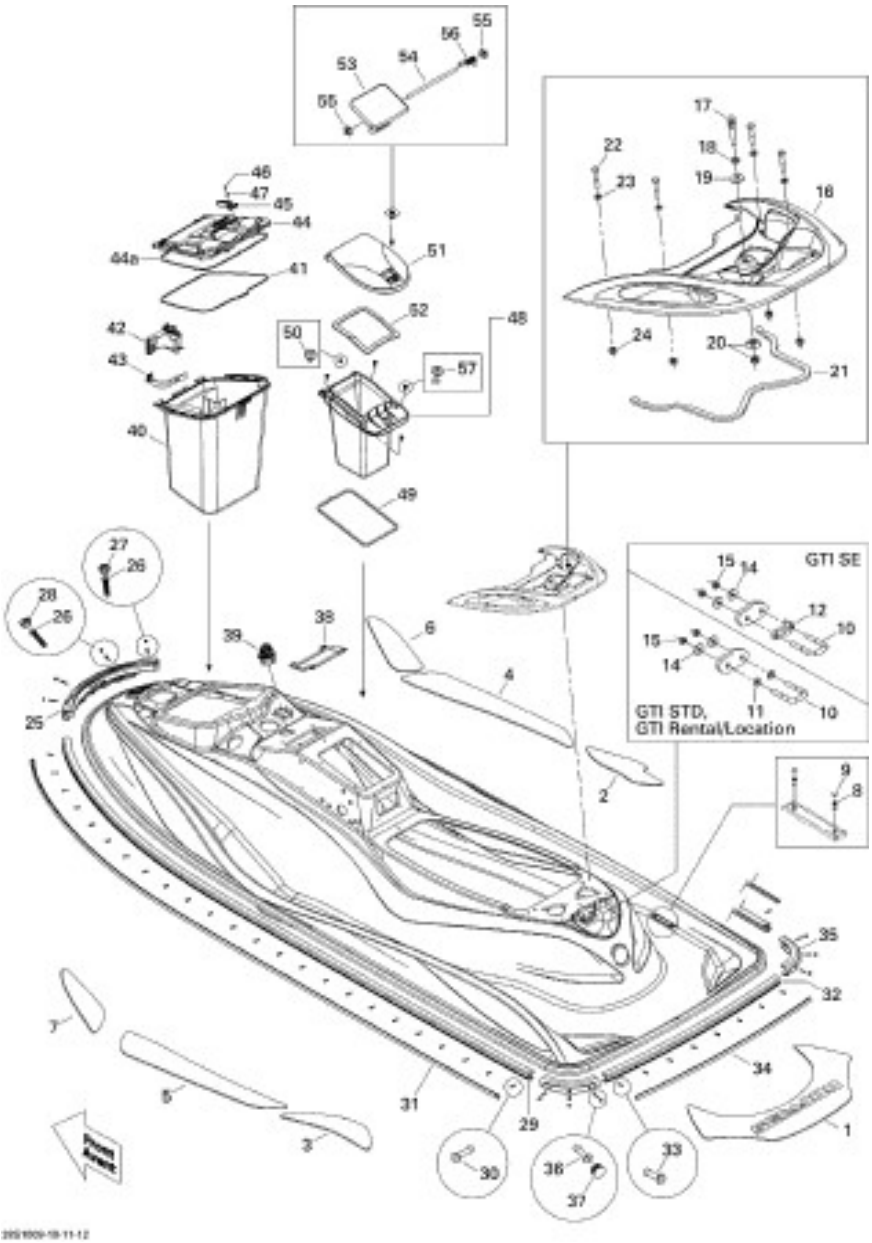

51	291002249	Glove Box Door
52	291002250	Gasket
53	269500553	Latch, Black
54	211400008	Pin
55	211100002	Push Nut
56	291000922	Latch Spring
57	293150123	Pop Rivet 3/16"

1	291002047	Rear Carpet
2	291002481	RH Center Rear Carpet
3	291002482	LH Center Rear Carpet
4	291002483	RH Center Front Carpet
5	291002484	LH Center Front Carpet
6	291002485	RH Front Carpet
7	291002486	LH Front Carpet
8	293150016	Rivet 1/8"
9	293000014	Snap Cap
10	N/A	Not available for this vehicle
11	N/A	Not available for this vehicle
12	N/A	Not available for this vehicle
14	N/A	Not available for this vehicle
15	N/A	Not available for this vehicle
16	291002792	Rear Handle Grab
17	291000945	Seat Stud
18	232100600	Hex. Jam Nut M10
19	234002600	Flat Washer 10 mm, Stainless
20	271000598	Nut Housing Ass'y
21	293200003	Neoprene Seal, Meter
22	207083560	Hex. Screw M8 X 35
23	234081600	Flat Washer 8 mm
24	232581200	Hex. Elastic Nut M8, Brass
25	291001942	Bumper Nose, Black
26	250000236	Torx Screw 10-14 X 1-1/8"
27	291001519	Bumper Plug, Black
28	291001040	Bumper Plug, Black
29	204050270	Side Bumper, Black
30	293150005	Pop Rivet 3/16"
31	291002143	Side Bumber Trim, Viper Red
32	291002242	Rear Bumper, Black
33	293150005	Pop Rivet 3/16"
34	291002746	Side Bumper Trim
35	291002244	Bumper Corner
36	293150013	Pop Rivet 3/16"
37	291000339	Bumper Plug
38	293250171	Gasket
39	293720042	Grommet
40	269501491	Storage Tray Ass'y
41	293250161	Gasket
42	269501501	Extinguisher Support
43	269500408	Strap
44	269501643	Storage Tray Cover
44a	293250168	Gasket
45	XXX	Latch
46	211000021	Pan Head Phillips Screw 10 X 7/8"
47	234052600	Flat Washer 5 mm
48	291002531	Glove Box
49	291002251	Gasket
50	293830005	Rubber Plug, Black

SEADOO

2010

Wake 155

Hull

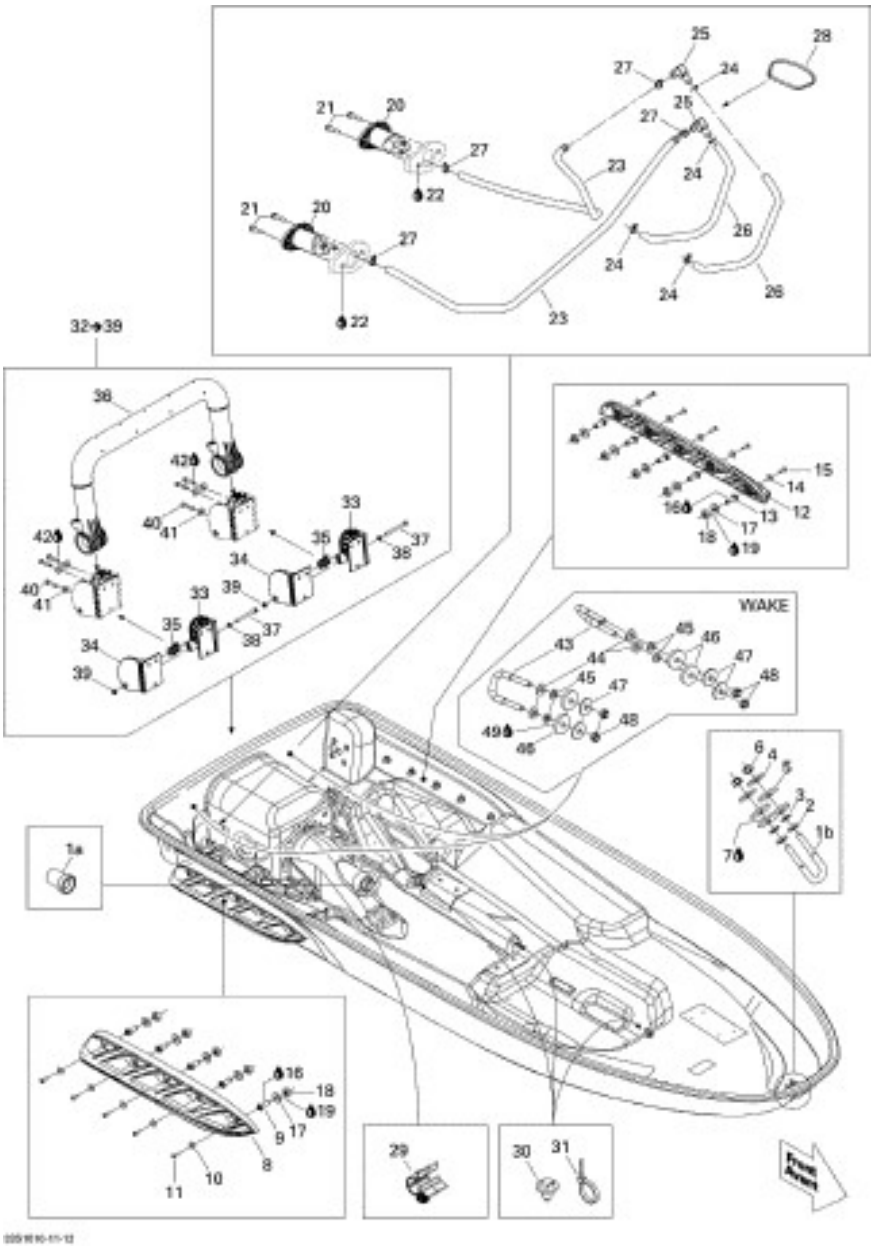

48	232581200	Hex. Elastic Nut M8, Brass. Wake
49	296000309	Sealant Silicone, Clear. Wake

1a	292000975	Hull Insert, 41 mm
1b	292000933	U-Clamp
2	293050001	Flat Washer
3	234081100	Flat Washer 8 mm
4	250200011	Flat Washer 8 mm, Stainless
5	293830037	Rubber Washer
6	232581200	Hex. Elastic Nut M8, Brass
7	296000309	Sealant Silicone, Clear
8	292001378	RH Sponson
9	292001046	Sponson Adapter
10	250200022	Flat Washer M6.6 X 22
11	250000299	Torx Screw M6.6 x 20, Stainless
12	292001377	LH Sponson
13	292001046	Sponson Adapter
14	250200022	Flat Washer M6.6 X 22
15	250000299	Torx Screw M6.6 x 20, Stainless
16	296000309	Sealant Silicone, Clear
17	250200053	Flat Washer M12
18	250100078	Elastic Stop Nut M12
19	293800060	Loctite 243, 10 ml
20	292001252	Drain Plug
21	211000023	Hex. Screw 10-14 X 7/8”
22	296000309	Sealant Silicone, Clear
23	415080700	Polyurethane Hose, 8 mm
24	293750001	Tie-Rap 94 mm
25	293710117	Elbow Fitting 90°
26	415080700	Polyurethane Hose, 8 mm
27	293750001	Tie-Rap 94 mm
28	293750008	Tie-Rap 350 mm
29	275500528	Hose Retainer
30	293730040	Mount Dart
31	414115200	Tie-Rap 180 mm
31	293750008	Tie-Rap 350 mm
32	XXX	Ladder Ass'y. Includes 32 to 39
33	292001201	Support A
34	292001202	Support B
35	292001259	Spring
36	292001204	Overmolded Bar
37	207066560	Hex. Screw M6 x 65
38	234061600	Flat Washer M6, Stainless
39	232561600	Hex. Flanged Elastic Nut M6
40	250000386	Socket Screw M6 X 30, Scotch Grip
41	234062600	Flat Washer M6, Stainless
42	293800066	Sealant, Loctite 5900, 300 ml
43	292000933	U-Clamp. Wake
44	293050001	Flat Washer. Wake
45	234081100	Flat Washer 8 mm. Wake
46	293830037	Rubber Washer. Wake
47	250200011	Flat Washer 8 mm, Stainless. Wake

SEADOO

2010

Wake 155

Ventilation

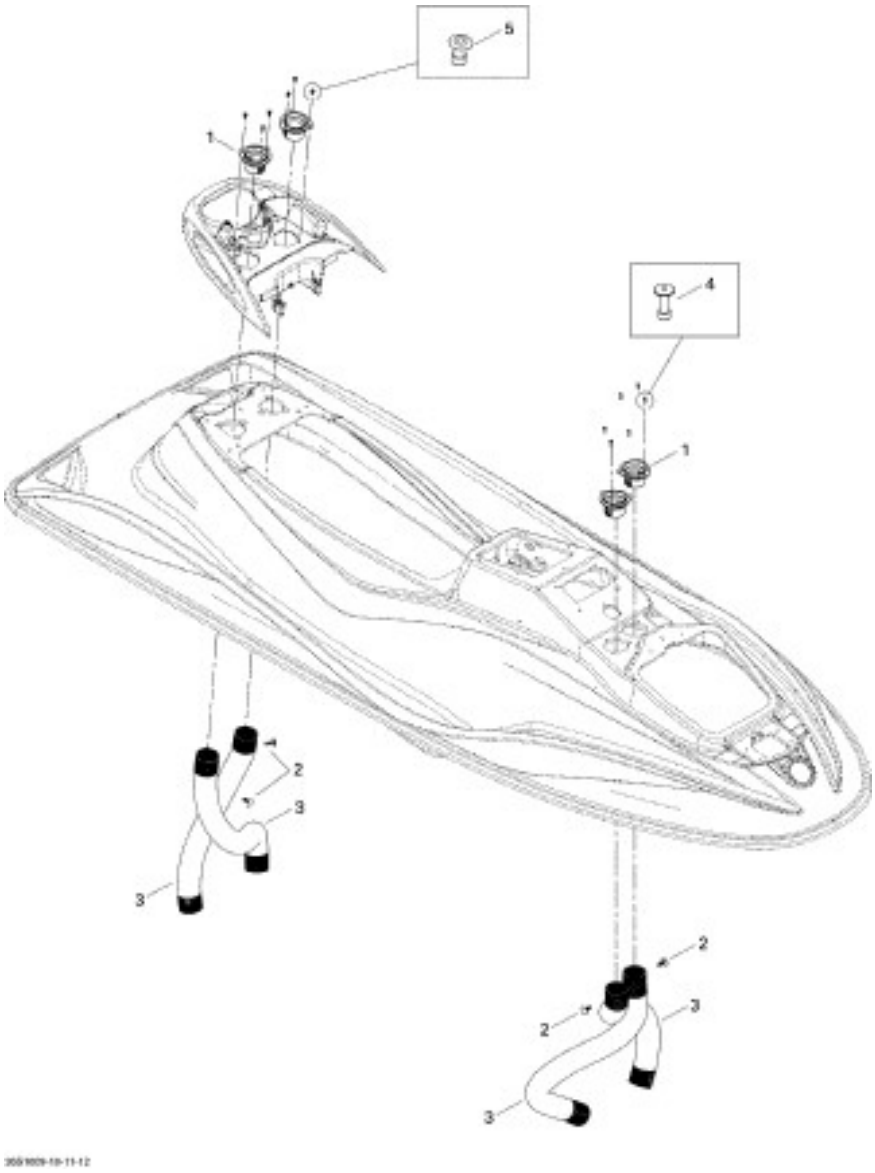

1	291002299	Ventilation Adaptor
2	293730011	Dart, Black
3	291002515	Ventilation Hoses
4	293150123	Pop Rivet 3/16"
5	293150027	Avdel Rivet

SEADOO

2010

Wake 155

Seat

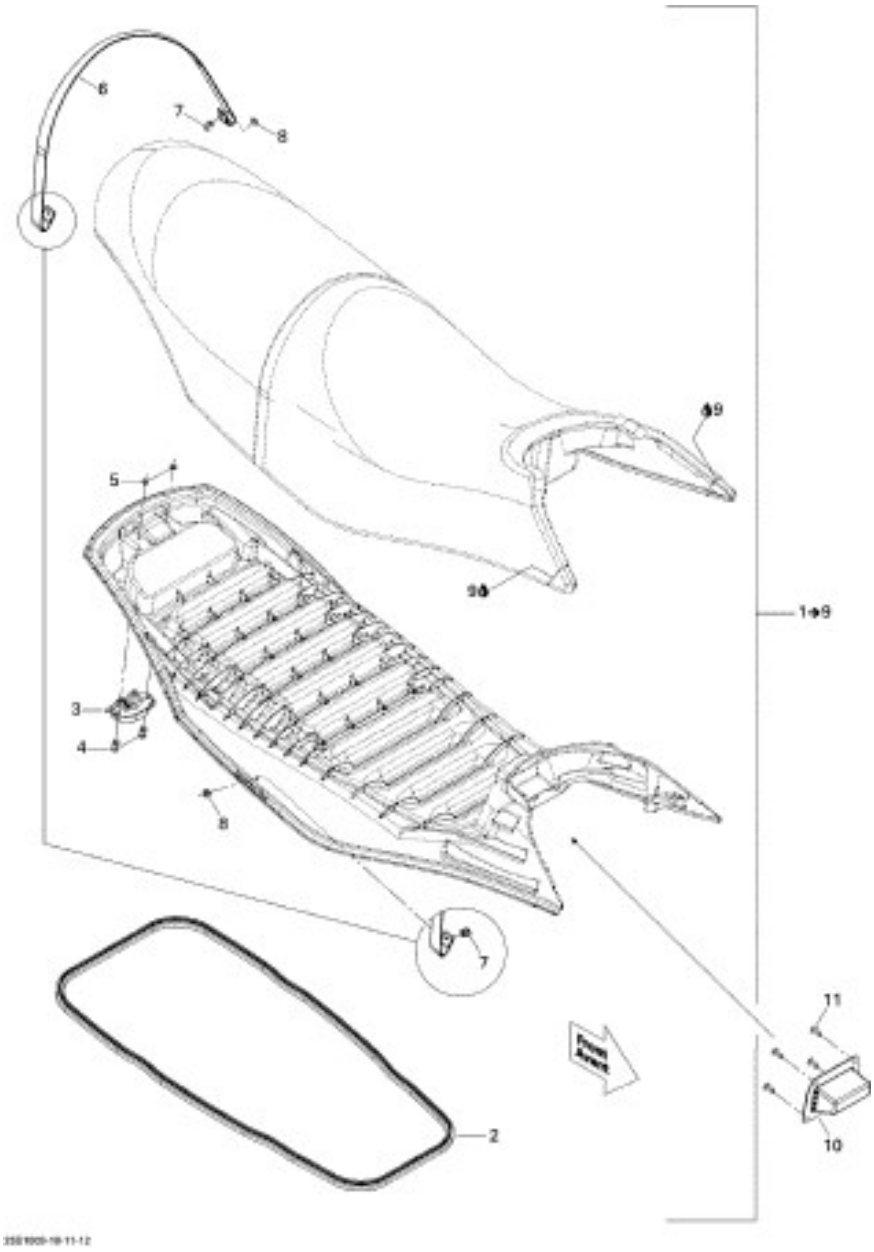

1	269001761	Seat Ass'y. Includes 1 to 9
2	293200124	Seal
3	269700109	Latch Ass'y
4	293150151	Rivet 1/4"
5	234061600	Flat Washer M6, Stainless
6	269001549	Seat Strap
7	293150067	Rivet
8	293720067	Grommet
9	413705800	Loctite 414, 29.5 Cc
10	269001389	Seat Receptacle
11	293150123	Pop Rivet 3/16"

SEADOO

2010

Wake 155

Front Cover

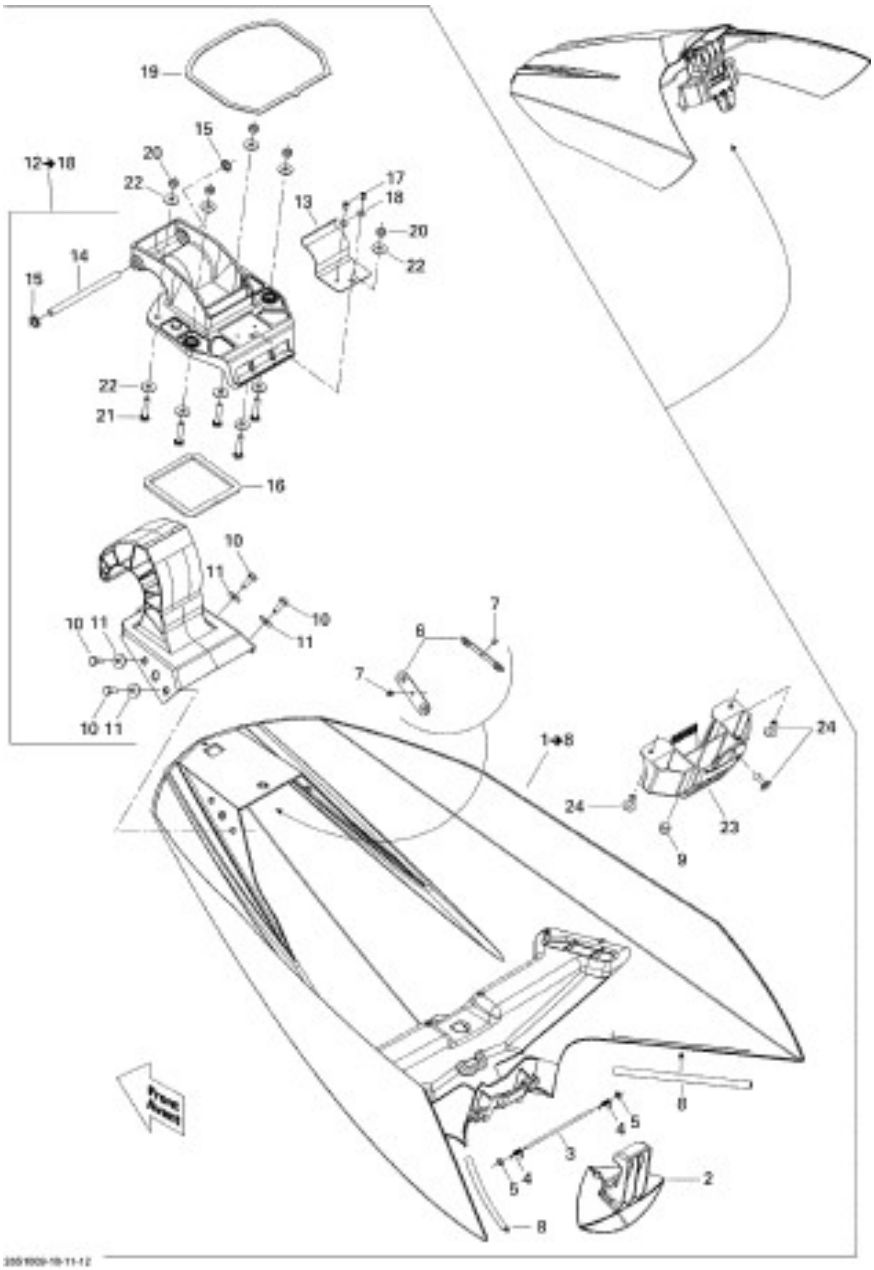

1	269501720	Storage Cover Ass'y. Includes 1 to 8
2	269700098	Latch Lever
3	269501479	Pin
4	291000922	Latch Spring
5	250100061	Push Nut
6	277001479	Plate
7	293150006	Pop Rivet 1/8"
8	293250176	Gasket
9	293830005	Rubber Plug, Black
10	207361660	Hex. Screw M6 X 16, Scotch Grip
11	234062600	Flat Washer M6, Stainless
12	269501446	Hinge Ass'y. Includes 12 to 18
13	269700099	Hinge Spring
14	269700024	Axle
15	250100046	Push Nut
16	293250155	Upper Gasket
17	293150143	Pop Rivet 1/8
18	234032600	Flat Washer M3, Stainless
19	293250166	Gasket
20	232561200	Brass Elastic Stop Nut, M6
21	207063060	Hex. Screw M6 X 30
22	234062600	Flat Washer M6, Stainless
23	269501480	Latch Base
24	293150123	Pop Rivet 3/16"

SEADOO

2010

Wake 155

Decals

1	219903076	Warning Decal, Tip Over/Heat
2	219903140	Sea-Doo Hull Decal
3	219903151	LH Wake Hull Decal
4	219903152	RH Wake Hull Decal
5	219903150	Decal Deflector
6	219903141	Front Sea-Doo Decal
7	219902469	Logo, BRP 68 mm
8	219902677	Logo, BRP 20 mm
9	219903142	LH Decal
10	219903143	RH Decal
11	219902979	Warning Decal, Injuries And Deaths
12	219902684	Masking Strip
13	219903144	LH Front Side Decal
14	219903056	Decal, ROTAX 4-TEC
15	219903145	RH Front Side Decal
16	219903146	LH Side Decal
17	219903147	RH Side Decal
18	219903148	LH Rear Side Decal
19	219903149	RH Rear Side Decal
20	219902469	Logo, BRP 68 mm
21	219903082	Warning Decal, Battery
22	219902656	Decal, Exemption
23	219903123	Warning Decal, Gasoline
24	219903135	Caution Decal, Engine Oil Level
25	219902679	Decal, Emission Control
26	219903132	Caution Decal, Security
27	219903088	Warning Decal, Boarding Step
28	219903126	Caution Decal, Maintenance
29	219902982	Pictogram Cover Label

SEADOO

2010

Wake 155

Electrical System

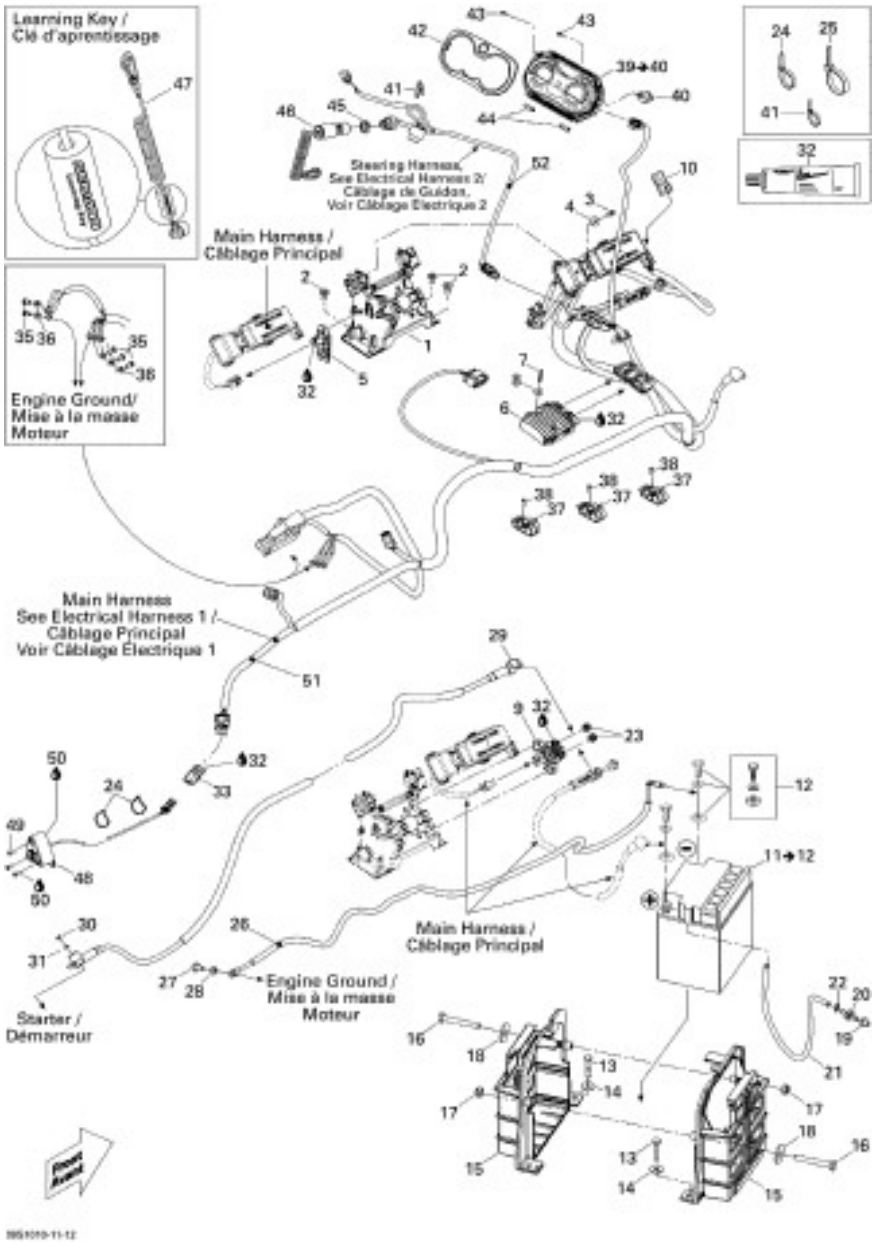

51	278002272	Main Harness
52	278002383	Steering Harness Ass'y

1	278002157	Module Support
2	293150123	Pop Rivet 3/16"
3	211000023	Hex. Screw 10-14 X 7/8"
4	234062600	Flat Washer M6, Stainless
5	278001992	Interrupter T.O.P.S.
6	710001103	Voltage Regulator
7	250000236	Torx Screw 10-14 X 1-1/8"
8	234062600	Flat Washer M6, Stainless
9	278002347	Starter Relay
10	278002148	Diagnostic Connector Cap
11	278001882	Battery, 30 Amperes. Includes 11 to 12
12	295500849	Battery Fastener Kit
13	207284060	Hex. Screw M8 X 40, Scotch Grip
14	234082600	Flat Washer 8 mm, Stainless
15	278002339	Battery Support
16	207164560	Hex. Screw M6 X 45
17	232561200	Brass Elastic Stop Nut, M6
18	234062600	Flat Washer M6, Stainless
19	293720029	Grommet
20	275500499	Check Valve
21	275500446	Hose 6 mm
22	293750001	Tie-Rap 94 mm
23	232561200	Brass Elastic Stop Nut, M6
24	414115200	Tie-Rap 180 mm
25	293750008	Tie-Rap 350 mm
26	278002177	Ground Cable Ass'y
27	207302060	Hex. Screw M10 X 20, Scotch Grip
28	234000600	Flat Washer 10 mm, Stainless
29	278002267	Starter Cable
30	232561200	Brass Elastic Stop Nut, M6
31	234061600	Flat Washer M6, Stainless
32	293550004	Dielectric Grease, 150 g
33	278000281	Female Terminal Housing, 3 Circuits
35	207361260	Hex. Screw M6 X 12, Scotch Grip
36	234061600	Flat Washer M6, Stainless
37	275500553	Retainer
38	241141660	Flanged Hex. Screw K40 X 16
39	278002273	Digital Multifunction Gauge. Includes 39 to 40
40	275500398	Check Valve
41	293750002	Tie-Rap 130 mm
42	278002135	Gauge Bezel, Black
43	241142560	Hex. Flanged Screw K40 X 25
44	293830113	Trim
45	278000508	Safety Switch Nut
46	278002199	Safety Lanyard, Antitheft
47	278002406	Safety Lanyard, Learning Key
48	278001993	Speed Sensor
49	211000021	Pan Head Phillips Screw 10 X 7/8"
50	296000309	Sealant Silicone, Clear

SEADOO

2010

Wake 155

Electrical Harness 1

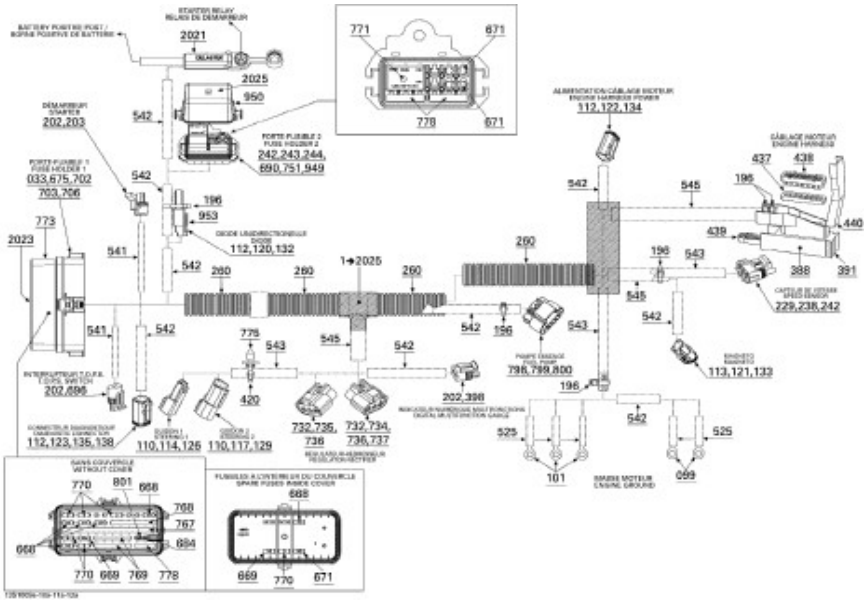

1	278002272	Main Harness. Includes 1 to 2025
33	278000999	Wire Seal
99	278000992	Open Barrel
101	278001392	Open Barrel
110	278000631	Male Terminal
112	278000632	Female Terminal
113	278001661	Female Terminal
114	409206900	Male Housing, 2 Circuits
117	270000137	Female Terminal Housing, 6 Circuits
120	409207300	Female Terminal Housing, 2 Circuits
121	409207400	Female Housing
122	278000739	Female Terminal Housing, 4 Circuits
123	278000736	Male Housing, 6 Circuits
126	409207500	Male Lock, 2 Circuits
129	278000735	(Female) Secondary Lock (6 Circuits) (Deutsch)
132	409207500	Male Lock, 2 Circuits
133	409207200	(Female) Secondary Lock (3 Circuits) (Deutsch)
134	278000738	Lock Female, 4 Circuits
135	278000737	(Female) Secondary Lock (6 Circuits) (Deutsch)
138	293000052	Sealing Cap
196	293750002	Tie-Rap 130 mm
202	278001114	Female Terminal
203	278001113	Male Terminal Housing, 2 Circuits
229	278000223	Female Terminal
238	278000273	Male Housing, 3 Circuits
242	278000218	Wire Seal
243	710000048	Wire Seal
244	278000216	Wire Seal
260	515175319	Tubing 22mm
388	278001750	Female Terminal
391	278001751	Male Housing, 41 Circuits
398	278001308	Male Connector, 4 Circuits
420	414115200	Tie-Rap 180 mm
437	515175886	Seal
438	515175883	Latch
439	515175884	Lock
440	515175885	Cover
525	710000482	Shrink Tubing
541	515175442	Tubing 6 mm
542	409901700	Tubing 9 mm
543	409902000	Tubing 12 mm
545	415080000	Tubing 16 mm
668	710000744	Little Fuse, 10 Amperes
669	710000745	Little Fuse, 15 Amperes
671	710000747	Little Fuse, 30 Amperes
675	710000660	Fuse Box Ass'y
684	710000781	Fuse Puller
690	710000890	Female Terminal
696	278002064	Connector, 3 Circuits
702	710000836	Female Terminal

SEADOO

2010

Wake 155

Electrical Harness 1

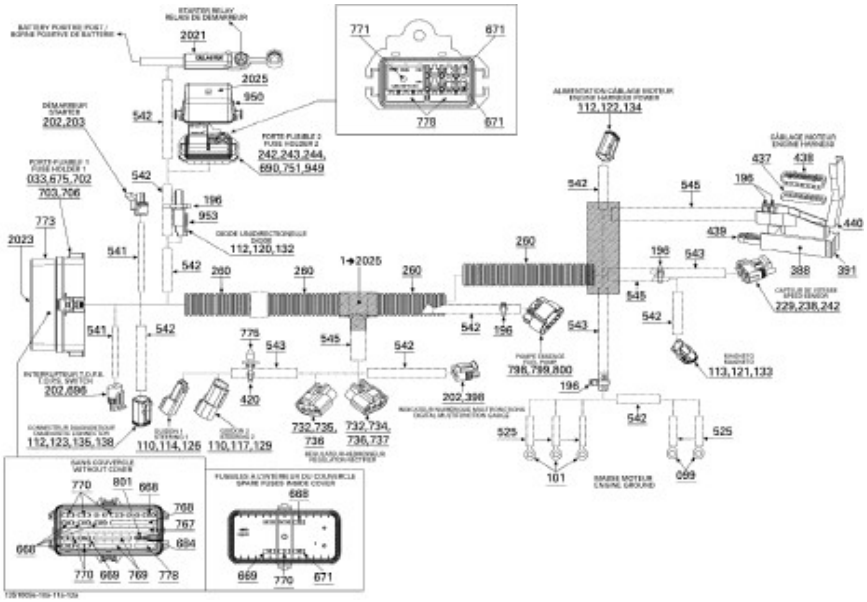

703	710000837	Female Terminal
706	710000840	Cap
732	710000877	Terminal
734	710000879	Housing, 3 Circuits
735	710000880	Housing, 3 Circuits
736	710000881	Seal
737	710000882	Cap
751	710000918	Female Terminal
767	278002165	Bus Bar
768	278002165	Bus Bar
769	278002165	Bus Bar
770	710001008	Little Fuse, 3 Ampere
771	278002168	Relay, 30 AMP
773	710001026	Fuse Cover
775	293730018	Mount Dart
778	278002165	Bus Bar
798	278002185	Male Housing, 4 Circuits
799	278002186	Wire Seal
800	278002187	Female Terminal
801	278002188	Resistance 500 OHMS
949	278002285	Fuse Box Ass'y
950	278002286	Fuse Box Cover
953	278002306	Diode Cap
2021	278002163	Battery Cable
2023	278002171	Fuse Decal
2025	278002192	Fuse Decal

SEADOO

2010

Wake 155

Electrical Harness 2

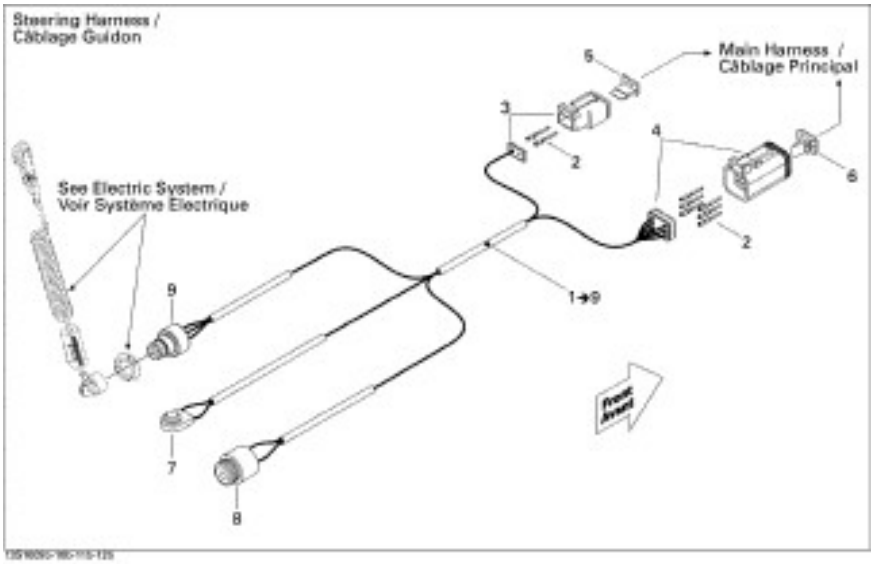

1	278002383	Steering Harness Ass'y. Includes 1 to 9
2	278000632	Female Terminal
3	409207300	Female Connector, 2 Circuits
4	278000736	Male Connector, 6 Circuits
5	409207100	Female Lock, 2 Circuits
6	278000737	Male Lock, 6 Circuits
7	295501137	Start/Stop Switch Kit
8	278002290	Buzzer
9	278002350	Safety Switch

SEADOO

2010

Wake 155

Engine Harness

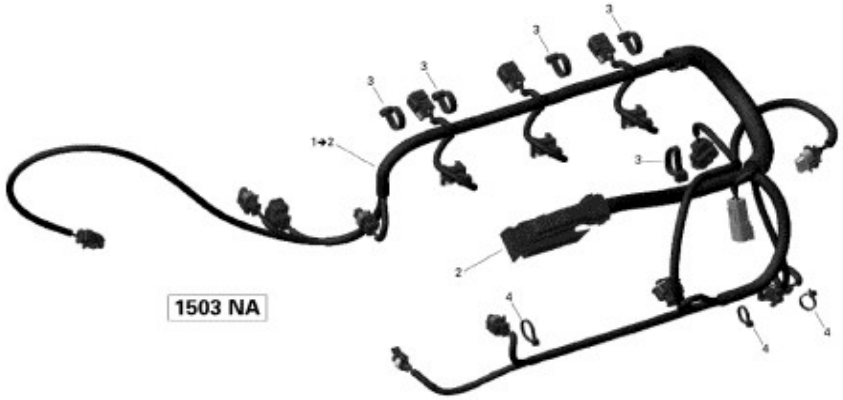

1	420665205	Engine Wiring Harness Ass'y. Includes 1 to 2
2	420664450	ECM Connector
3	420866716	Tie-Rap
4	420866714	Tie Rap

SEADOO

2010

Wake 155

Sea-Doo Publications

The illustrations figuring in this parts catalog show typical construction of the different assemblies and, in all cases, may not reproduce the full detail or exact shape of the parts shown. However, they represent parts which have the same or similar function.

Les illustrations contenues dans ce catalogue indiquent la disposition des pièces les unes par rapport aux autres. Il est donc possible qu'elles ne rendent pas compte de la forme exacte de ces pièces ainsi que de leurs détails de fabrication. Ces illustrations ont pour but d'identifier des pièces qui remplissent la même fonction ou une fonction identique.

SYMBOLS USED IN THIS CATALOG

®	In «Quantity» column means «Use as Required».
Opt	In «Quantity» column means «Optional».
XXX	Parts marked with «XXX» are not available as spare parts.

SYMBOLES UTILISÉS DANS CE CATALOGUE

®	Dans la colonne «Quantité» signifie «Au besoin».
Opt	Dans la colonne «Quantité» signifie «En option».
XXX	Les articles marqués d'un «XXX» ne sont pas disponibles comme pièces de remplacement.

1	219000660	RXP X / GTI / Wake Operator's Guide (English)
2	219000632	Guide du conducteur RXP X / GTI / Wake (French)
3	219000657	RXT / GTX / Wake Pro Operator's Guide (English)
4	219000631	Guide du conducteur RXT / GTX / Wake Pro (French)
5	219000726	Sea-Doo Advanced TEC PWC Trailer User's Guide (English)
6	219000706	Sea-Doo Advanced TEC PWC Trailer User's Guide (French)
7	219100429	2009 Sea-Doo RXT / GTX / Wake Pro Shop Manual (English)
8	219100430	2010 Sea-Doo RXT / GTX / Wake Pro Shop Manual (French)